WATTSMART® HOME ENERGY SAVINGS PROGRAM

Wyoming

Technical Specifications Manual

Table of Contents

Wattsmart Home Energy Savings Program 2

Foreword from the Home Energy Savings Program 7
IN 1.0-- Program Goal s and Eligibility 8
IN 1.1—Code Compliance, National and Regional Standards 8
IN 1.2-Knob and Tube Wiring 9
IN 1.3-Materials 9
IN 1.4-Foam Insulation 9
IN 1.5—Work Quality Verification Process 10
IN 1.6—Illustrations 10
IN 1.7—Human Contact Areas 10
IN 1.8—Permits and Remodeling Projects 10
IN 1.9—Equipment Maintenance 10
IN 1.10—Combustion Safety 10
IN 1.11—Determination of Existing R-Values 11
IN 1.12—Requirements for All Mechanical System Installations 11
IN 1.13—Additional Requirements for Heating System Condensation Drains 11
IN 1.14-Crawl Space Safety Considerations 12

1 PART 1: WEATHERIZATION AT—ATTIC INSULATION 13

AT 1.0—Introduction 13
AT 1.1—Attic Air Sealing 14
AT 1.2—Passive Attic Ventilation 14
AT 1.3—Baffles for Passive Attic Vents 15
AT 1.4—Dams 16
AT 1.5—Baffles for Chimneys, Flues and Other Heat Sources 17
AT 1.6—Bath and Exhaust Fans 18
AT 1.7—Kitchen Fans 19
AT 1.8—Dryer Exhaust Fans 19
AT 1.9—Water Pipes in Attics 19
AT 1.10—Interior Attic Access Doors 20
AT 1.11—Pull-Down Stairs 21
AT 1.12—Exterior Attic Access Doors 21
AT 1.13—Vertical Walls in Attic Spaces 21

AT—ATTIC INSULATION: INSTALLATION 22

AT 2.0—General Attic Insulation Requirements 22
AT 2.1—Installing Loose-Fill Insulation 22
AT 2.2—Installing Batt-Type Insulation 23
AT 2.3—Floored Attics 23
AT 2.4—Vented Vaulted Ceilings 23
AT 2.5—Unvented Vaulted Ceilings 23
AT 2.6—Insulating Rake and Crown Attics 23
AT 2.7—Interior Roof Insulation 25
AT 2.8—Low-Sloped, Flat Roofs and Exterior Roof Insulation 25

DU—DUCT SEAL AND INSULATION 26

DU 1.0—Introduction 26
DU 1.1—Combustion Safety 26
DU 1.2—Duct Sealing 26
DU 1.2a—Duct Repair 27
DU 1.2b—Duct Support 27
DU 1.2c—Duct-Sealing Materials 27
DU 1.2d—Duct-Sealing Opportunities 27
DU 1.2e—Flexible Ductwork 27
DU 1.3—Duct Insulation 28
DU 1.4—Manufactured Homes Duct Sealing 28

UN—UNDERFLOOR INSULATION: OVERVIEW 29

UN 1.0—Introduction 29
UN 1.1—Underfloor Preparation and Debris 30
UN 1.2—Ventilation 30
UN 1.3—Ground Covers 31
UN 1.4—Sealing Floor Penetrations 31
UN 1.5—Floors Above Other Unconditioned Areas 31
UN 1.6—Rim Joist Insulation 32

UN—UNDERFLOOR INSULATION: INSTALLATION 32

UN 2.0—General Installation Requirements 32
UN 2.1—Floor Insulation Support Materials 33
UN 2.2—Spacing Requirements for Support Systems 34
UN 2.3—Water Pipe Insulation 35
UN 2.4—Inside Access Doors for Under-floors 35
UN 2.5—Outside Access Doors for Under Floors 36
UN 2.6—Dryer Exhaust 36
UN 2.7—Downdraft Exhaust Ducts 36
UN 2.8—Vertical Walls in Underfloor Spaces 36
UN 2.9—Installing Foam Insulation 36
UN 2.10—Miscellaneous Underfloor Specifications 37

CS-CRAWLSPACE INSULATION 37

CS 1.0—General Installation Requirements 37
CS 1.1 Crawl Space Safety Considerations 37
CS 1.2 Crawl space floor. 38
CS 1.3 Wall Insulation. 38
CS 1.4 Mechanical/Electric Equipment 38

WA—WALL INSULATION 38

WA 1.0—Introduction 38
WA 1.1—Knob and Tube Wiring 38
WA 1.2—Insulating Closed Walls 38
WA 1.3—Plugs and Finish Work 39
WA 1.4—Removing and Replacing Siding 39
WA 1.5—Open Wall 39
WA 1.6—Interior Installations 39

WI—WINDOWS AND SLIDING GLASS DOORS 39

WI 1.0—Introduction 39
WI 1.1—General Requirements for Glazing 40
WI 1.2—General Requirements for External Sealants 41
WI 1.3—Insert Windows 41
WI 1.4—Surface-Mounted Windows 41
WI 1.5—Flanged Windows 41
WI 1.6—Exposed to the Elements 42
WI 1.7—Stucco-Mounted Windows 43
WI 1.8—Miscellaneous Requirements 43
WI 1.9—Health and Safety Requirements 43
WI 1.10—General Safety Glazing Requirements 43
WI 1.11—Emergency Egress Openings 44

2 PART 2: MECHANICAL SYSTEMS 45

CAC—CENTRAL AIR CONDITIONER 45

CAC 1.0—Introduction 45
CAC 1.1—Thermostat 45
CAC 1.2—Line Set Requirements 45
CAC 1.3—Outdoor Unit Installation 45

CCHP—COLD CLIMATE HEAT PUMPs ..... **Error! Bookmark not defined.**
ECM—ELECTRICALLY COMMUTATED MOTOR (ECM) RETROFIT 45

ECM 1.0—General Requirements 45

EVAP—EVAPORATIVE COOLERS 46

EVAP—EVAPORATIVE COOLERS 46
EVAP 1.1—Net Free Area 46
EVAP 1.2—Installation 46
EVAP 1.3—Maintenance 46

GEO—GROUND SOURCE HEAT PUMP 46

GEO 1.0—General Requirements 46

HP BP—HEAT PUMP WITH BEST PRACTICES AND INSTALLATION 47

HP BP 1.0—Introduction 47
HP BP 1.1—Thermostat 47
HP BP1.2—Line Set Requirements 47
HP BP1.3—Outdoor Unit Installation 47
HP BP 1.4—Air Flow Test 48
HP BP 1.5—Refrigerant Charge Performance Check 48
HP BP 1.6—Lockout Controls 48
HP BP 1.7—Sizing 48

2.1 WH—HEAT PUMP WATER HEATERS 48

WH 1.0—Introduction 48
WH 1.1—Installation 49

3 PART 3: NEW HOMES PERFORMANCE PATH WHPP— 50

WHOLE HOME PERFORMACE PATH: OVERVIEW 50

WHPP 1.0— Introduction 50
4 APPENDIX A: WEIGHTED ATTIC R-VALUE TABLES 51
5 APPENDIX B: QUICK REFERENCE GUIDE 54
APPENDIX C: GLOSSARY 56
6 APPENDIX D: BEST PRACTICE GUIDELINES 61

Foreword from the Home Energy Savings Program

This Technical Specifications Manual articulates the Rocky Mountain Power Home Energy Savings Program requirements for HVAC, plumbing, and weatherization equipment and service measure installations. This manual is intended to ensure the safety, durability and energy efficiency of customers' homes and provide valuable technical resources for installers.

The weatherization and mechanical specifications included in this manual describe the installation requirements for measures that are eligible for cash incentives. For specific Program requirements, such as eligible measures, please refer to the appropriate Trade Ally Program Manual. The Program will conduct quality assessment reviews in accordance with applicable specifications and Program requirements.

Throughout this guide, you will see vertical bars in the left margins. These markings identify new specifications and/or language that has been added or amended from the previous version. We will conduct quality assessment reviews in accordance with the new specifications.

This manual goes into effect on August 15, 2019. Please familiarize yourself with these updates and make sure you are aware of any changes relevant to your work.

For more information, please email HESTradeAllyRMP@rockymountainpower.net or call the Home Energy Savings

Trade Ally Hotline, 1.800.942.0281, option 1.

IN 1.0-- Program Goal s and Eligibility

The Rocky Mountain Power Home Energy Savings Program (Program) offers cash incentives on a variety of HVAC, plumbing, and weatherization equipment and services. The Program promotes installation practices that are designed to maximize system performance and efficiency. By helping customers minimize their energy use, the Program saves customers money on their energy bill and also reduces the growing demand for power in the region.

The main purpose of weatherization installations is to prevent winter heat loss or summer heat gain from conditioned indoor spaces to unconditioned or outdoor spaces. Conditioned space is defined as an enclosed area within a building that is heated or cooled and designed, or modified, to have a complete and effective pressure boundary. Garages, barns, unattached shops, sheds, unfinished attics and crawlspaces are considered unconditioned space for the purposes of incentive qualification. A garage is defined as any space, heated or unheated, that features a large door designed to permit the entry of an automobile. Weatherization measures shall be installed in the thermal envelope—or building shell—of a home. These areas are typically defined by the separation of conditioned and unconditioned spaces, or between a conditioned space and the outside of the house. To be eligible for a Program insulation incentive, all insulation shall be in contact with a continuous and effective air barrier. Sheetrock, plywood and foam board are examples of air barrier materials; fiberglass batt-type insulation is not considered an air barrier.

Plumbing and HVAC equipment and service measures are intended to improve performance and efficiency of space and water heating and cooling equipment. All measure qualifications shall be met including compliance with qualified fuel type, floor area served by equipment, and existing equipment.

To be considered a complete measure and eligible for incentives, a measure shall meet all specifications and requirements listed in:

1. The relevant sections of this manual
2. The relevant sections of the Trade Ally Program Manual
3. The relevant incentive application form(s)
4. The relevant Trade Ally Participation Agreement(s)

Resources and additional information can be located at: http://homeenergysavings.net/

The Technical Specifications Manual may not cover every situation. If you have questions, email the Home Energy Solutions Trade Ally Team at HESTradeAllyRMP@rockymountaingpower.net or call 1.800.942.0281, option 1.

IN 1.1—Code Compliance, National and Regional Standards

In cases where federal, national, regional, state or local code or regulation exceeds the requirements herein, the code or regulation shall apply. If the federal, national, regional, state or local code or regulation does not exceed the requirements herein, the requirements contained in this Technical Specifications Manual shall apply. Examples of national and regional regulations include, but are not limited to, building permit, asbestos, lead, combustion appliance, vermiculite, knob and tube wiring, and fire safety requirements.

It is the contractor's sole responsibility to conform to all applicable codes and regulations for installing mechanical equipment in existing homes. Where applicable codes exceed these specifications, installation shall comply with code minimums.

Contractors bear sole responsibility for complying with all relevant state and national guidelines where the presence of regulated materials is known or suspected, in order to ensure technician and occupant safety. Where the presence of regulated materials is known or suspected, contractors are encouraged to consult guidelines from, but not limited to:

Wyoming Department of Environmental Quality (DEQ): http://deq.wyoming.gov/

Occupational Health and Safety Division (OSHA): https://www.osha.gov/

Environmental Protection Agency (EPA): https://www.epa.gov/regulatory-information-topic

Building Performance Institute (BPI): http://www.bpi.org/tools_downloads.aspx?selectedTypeID=STD

IN 1.2-Knob and Tube Wiring

Active knob and tube wiring in attics, walls or floors shall be decommissioned and removed before insulation is added. Alternatively, the electrical system shall be inspected and shall receive written approval by a certified electrical inspector or general supervising electrician employed by a licensed electrician before insulation is added. A copy of any such written approval shall be provided to the customer and, upon request, to the Program. Insulation of attics, walls or floors with knob and tube wiring shall adhere to state and local code.

Refer to WA 1.1 for additional information on insulating exterior wall cavities that contain active knob and tube wiring

IN 1.3-Materials

Materials used in the Program shall meet or exceed applicable state, federal or local code and regulations. All materials shall be installed to the manufacturer's specifications. The Program does not keep a list of approved products. Material information shall be provided to the Program, upon request. Adherence to applicable codes and regulations is the responsibility of the contractor or building owner. The Program reserves the right to reject the use of materials and supplies it deems unacceptable.

IN 1.4-Foam Insulation

Foam insulation shall be installed in compliance with the manufacturer’s specification and in compliance with thermal and ignition barrier requirements for foam plastics, as defined by the prevailing jurisdictional building code. Special precautions, as determined by the manufacturer, shall be taken to prevent exposure to airborne chemicals produced during and immediately after the foam insulation application process by building occupants, workers, or pets.

When installing foam insulation products, the manufacturer’s name and product identification shall be left with the homeowner and presented to a Program representative for review, upon request, during the Quality Assurance process.

IN 1.5—Work Quality Verification Process

After eligible measures are installed, a Quality Assurance verification may be required to ensure compliance with Program specifications. The Program will conduct Quality Assurance verifications based solely upon incentive-qualifying measures. **If the installed eligible measures do not meet these specifications, the Program will notify the customer and contractor of the deficiencies and follow up with the contractor to perform corrective actions. The Program does not guarantee energy savings or performance of the installations under this Program. The Program does not assume responsibility for enforcing or determining compliance with codes and regulations or their interpretation**. The Quality Assurance verification is limited to measures or sections of measures that are reasonably visible from normal access locations. A reasonable effort will be made to see a representative sample of the measure. To ensure the work qualifies for incentives, the homeowner is responsible for discussing with the contractor any discrepancies between the work contracted and Program requirements.

IN 1.6—Illustrations

This manual features illustrations for clarity**. All illustration details are considered requirements** for the weatherization measures installed.

IN 1.7—Human Contact Areas

To receive a Program insulation incentive, fibrous insulation in human contact areas shall be covered with a vapor- permeable air barrier—such as ½" gypsum board or house wrap—to limit occupant exposure. Human contact areas may include attics, basements, garages and/or storage areas where occupants go for routine maintenance, storage or access. Vertical and overhead surfaces containing fibrous insulation and located in human contact areas shall also be covered. All covering shall meet applicable codes.

IN 1.8—Permits and Remodeling Projects

Incentives will not be issued for attic, wall or floor insulation improvements in existing homes if homeowners are required to make the upgrades to meet building code requirements (such as when a structural or mechanical permit is required). For example, if the exterior or interior wall sheathing is removed during a kitchen remodel project to update electrical or plumbing systems, the insulation added to repair the wall—returning it to building code requirements—is not eligible for incentives. However, the remaining walls in the home that are unaffected by the permit are eligible for standard incentives if the work meets Program requirements.

Contact the trade ally team at HESTradeAllyRMP@rockymountainpower.net or call 1.800.942.0281, option 1 for additional information regarding incentives eligibility for a remodeling project.

IN 1.9—Equipment Maintenance

All equipment used for diagnostics, installation of insulation, safety, or other weatherization purposes shall be used in accordance with the manufacturer's instructions and shall be properly maintained and calibrated.

IN 1.10—Combustion Safety

It is the responsibility of the Trade Ally to ensure that all combustion appliances contained within the confines of the structure are properly and safely vented, operating, and have suitable combustion air before and after duct sealing occurs (test in - test out)and to ensure that all applicable state/local laws, codes, and standards are met and the indoor air quality of the dwelling is not compromised. A combustion appliance is any fuel-burning appliance including ovens, dryers, water heaters, and space heating systems that utilizes natural gas, propane, oil, kerosene, or wood.

.

.

A functioning and properly installed (in accordance with manufacturer's specifications) UL-listed (2034) carbon monoxide alarm is required when a combustion appliance is present within the thermal/pressure boundaries of the structure and if there is an attached garage.

IN 1.11—Determination of Existing R-Values

The total R-Value for a floor or an attic shall be calculated based on the depth of the insulation (in inches) multiplied by the recognized R-Value per inch of the insulation material.

The manufacturer-rated R-Value of an insulation batt shall be used in cases where the batts are labeled with a visibly recognizable manufacturer specification.

Refer to Appendix A for guidance in determining average R-Values for surfaces with varying levels of insulation.

Refer to Appendix B for a listing of the Programs recognized R-Values for insulation.

Willful violation of these guidelines and/or gross misrepresentation of existing insulation levels shall result in disqualification of the project in question from receiving incentives. Repeated violations may result in removal from the Trade Ally Network.

IN 1.12—Requirements for All Mechanical System Installations

Mechanical equipment shall be installed according to the manufacturer's specifications, except in circumstances where prevailing jurisdictional codes or Program standards exceed those specifications, in which case the applicable codes or Program standards shall be followed. Mechanical equipment shall be installed as a permanent fixture on the property, including any connections to the home's electrical wiring (including electrical connection strain relief) or water piping, and including exhaust ventilation ductwork, if applicable. Mechanical equipment shall have a clearly visible, permanent, factory-affixed label identifying the serial number, make, and model number of the unit. Mechanical equipment shall in no way compromise the structural integrity of the area in which the unit is being installed.

IN 1.13—Additional Requirements for Heating System Condensation Drains

Condensate produced by the operation of the HVAC system or heat pump water heater shall be removed from the area of installation via an adequately sloped drainage system, condensate pump or connection to an existing plumbing drain or vent. Condensation shall slope downhill and flow to a suitable termination point. Defrost or condensate cannot run onto walkways or driveways where it may pose a safety hazard. Condensate shall not drain onto building components susceptible to accelerated deterioration due to excess moisture. Condensate from

high efficiency combustion equipment shall be treated with a properly sized condensate neutralizer.

IN 1.14-Crawl Space Safety Considerations

Crawl spaces are confined spaces that may warrant certain safety considerations depending on access, ventilation and the nature of the work. Certain combinations access, ventilation and work operations (i.e. spraying liquid foam insulation) may require special measures to maintain a safe work environment. Please refer to OSHA publication 3138-01R.

(https://www.osha.gov/sites/default/files/publications/osha3138.pdf)

1 PART 1: WEATHERIZATION AT—ATTIC INSULATION

AT 1.0—Introduction

This section lists work and details that shall be performed before insulation is installed in attics and specifications for how to install insulation and attic-related ventilation. Insulation shall be installed to reduce heat loss between conditioned and unconditioned spaces. To be considered a complete measure and eligible for incentives, attic insulation shall:

1. Comply with the complete measure guidelines listed in section IN 1.0
2. Be installed in an area between conditioned living space and unconditioned space that is eligible for incentives
3. Bring the connected, accessible unconditioned space into compliance with the applicable requirements listed in section AT (Refer to Illustrations AT 1.0a through AT 1.0d)

Refer to IN 1.11 for the Program procedure for determining the R-Value of existing insulation. In cases where varying levels of insulation exist in an attic, Appendix A shall be used to determine whether the whole attic area qualifies for incentives. If not, only the area of attic that meets incentive criteria shall be claimed for incentives. The Program does not require that existing insulation in attic areas be increased if the existing insulation level is greater than the incentives qualification criteria.

Situations where insulation has been contaminated by vermin shall not be used to de-rate the insulation's R-Value.

Illustrations AT 1.0a through AT 1.0d (next page) provide guidance for installing incentive-eligible attic insulation in a variety of situations.

AT 1.0a: A flat attic space over the entire living space. The entire attic area "a" shall be brought into compliance with the requirements of section AT.

Illustration AT 1.0a

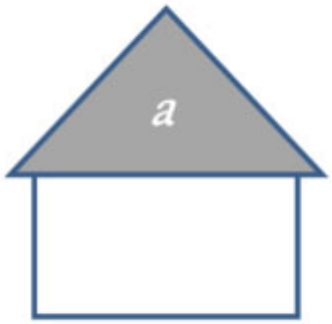

Illustration AT 1.0b

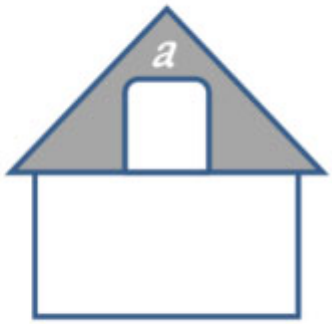

AT 1.0b: A rake and crown attic space with vented sloped cavities. The entire attic area "a"—all connected rakes and crown—shall be brought into compliance with the requirements of section AT.

Illustration AT 1.0c

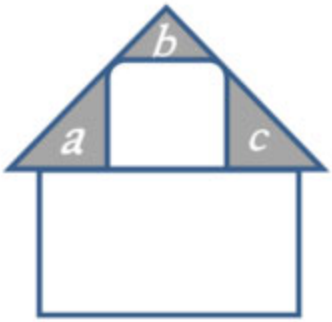

Illustration AT 1.0d

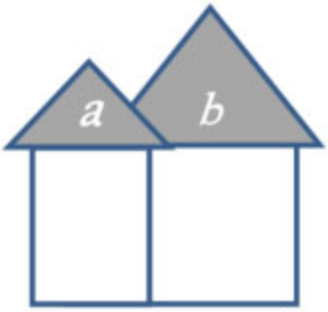

AT 1.0c: A rake and crown attic space with unvented sloped cavities. Only the specific area where attic insulation is being installed— "a," "b" or "c"—is required to comply with section AT.

AT 1.0d: Two flat attics physically separated from one another. Only the specific area being insulated— "a" or "b" —is required to comply with section AT.

Illustration AT 1.0e

AT 1.0e: Crown and rake attic are brought inside the thermal /pressure boundary of the building. The roof assembly over the entire build shall conform the requirements outlined in AT 2.6.

AT 1.1—Attic Air Sealing

The Program strongly recommends, but does not require, attic air sealing prior to installation of attic insulation.

Refer to Appendix D for guidance on air sealing attics.

AT 1.2—Passive Attic Ventilation

Enclosed attics and enclosed rafter spaces shall have cross ventilation for each separate space. Ventilating openings shall be protected against the entrance of rain and snow. The net free-ventilating area shall be not less than 1/150 of the area of the space ventilated, except that the area may be 1/300,

provided no more than 60% of the required ventilating area is provided by ventilators located in the upper portion of the space to be ventilated.

If an attic vent is used as an exhaust duct termination it shall not be included in passive attic vent area calculations.

Vent openings shall be covered with corrosion-resistant metal mesh with mesh openings of maximum 1/4 inch in dimension.

The vent area shall be the NFA, defined as the actual open area of the vent after subtracting any area blocked by screens or louvers. All vents shall be screened.

Air turbines shall not be installed in order to meet the ventilation requirements of these specifications; however, ventilating area of existing air turbines may be included by estimating the net free ventilating area of the air turbine in a locked, non-rotating position.

AT 1.3—Baffles for Passive Attic Vents

Eave and soffit vents shall be baffled to prevent wind washing through the insulation and blockage of the vent; all insulation types shall comply. Baffles shall be installed before adding more insulation and maintain an opening equal to or greater than the size of the vent. Baffles shall be fastened to roof rafters with at least 9/16" staples or roofing nails. Anchor points shall be spaced no more than 4" apart down each side in the upper half of the baffles. Baffles shall be rigid, impervious to wind, and resistant to moisture. All baffles shall extend 4" above the final level of insulation.

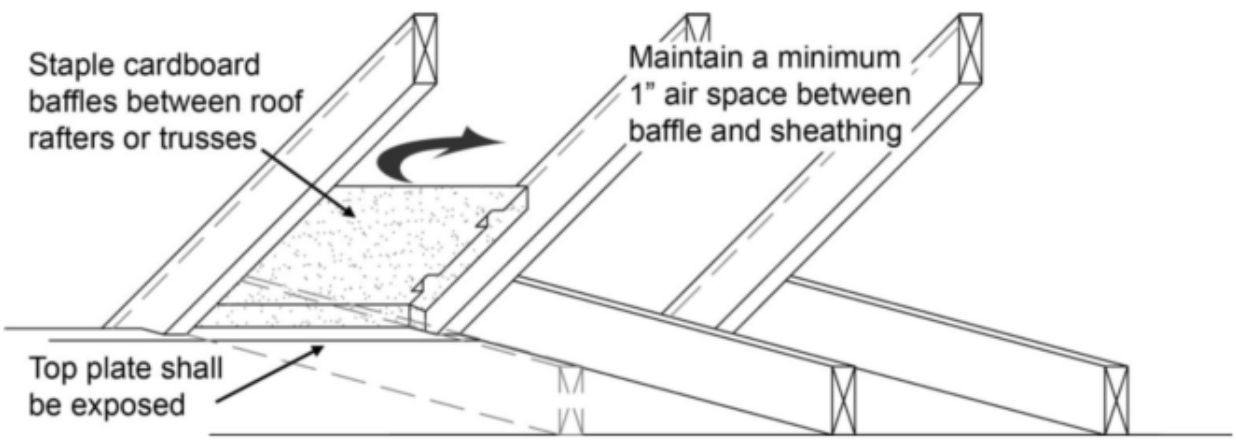

Figure 1 Illustration AT 1.3

A continuous dam shall be installed along soffits or eaves that have vents and are completely open to the attic. Where a continuous soffit vent exists, baffles shall be installed somewhat equally spaced along the length of the soffit and allow enough NFA to satisfy the lower ventilation needs, based on the standard set in section AT 1.2. Bays that are not baffled and are open to a soffit shall be blocked and sealed with a rigid moisture-resistant material so blown product is not able to enter the soffit. Baffles shall be installed far enough into the bay to reach the exterior side of the top plate. It is acceptable for compression to occur due to a narrowing roofline. Baffle installation will allow for the highest possible R- Value above the top plate of the exterior wall while maintaining 1" for proper ventilation.

Any other passive ventilation opening, such as gable or roof vents, within 6" of the final insulation level shall be baffled with a rigid material such as moisture-treated cardboard.

AT 1.4—Dams

Dams shall be installed where final levels of loose-fill insulation differ. Common areas requiring a dam include raised or dropped ceilings, the sides of vaulted ceilings, and between insulated and uninsulated areas such as garages. Dams shall be installed to maintain a consistent R-Value by one of the following methods:

1. A durable, rigid material such as plywood, oriented strand board, moisture-treated cardboard or foam board installed along the full length of required area and extending 4" above the final level of insulation. Rigid dams shall be mechanically and securely fastened.
2. An insulation batt a minimum of 14½" wide with an R-Value equal to or greater than that specified for the attic, laid flat along the full length of the required area. Insulation batts used as a dam shall be installed so that no gaps or voids exist.

Insulation dams as described in AT 1.10 are required around attic accesses and for porch roofs adjacent to the attic above conditioned space.

When mechanical equipment is located in the attic and regular access is needed for maintenance, newly installed insulation shall not prevent or block access. In these cases, a pathway shall be maintained including damming on both sides so access can be gained without disturbing the insulation. See AT 2.3 for additional details on insulating below decked platforms and walkways.

Damming shall be installed around mechanical equipment located in the attic, e.g., an air handler cabinet, where heights of loose-fill insulation change to prevent loose-fill from piling up against the equipment and to provide access for maintenance or replacement.

Refer to AT 1.10 for specifications for damming attic accesses, sloughing is not permitted.

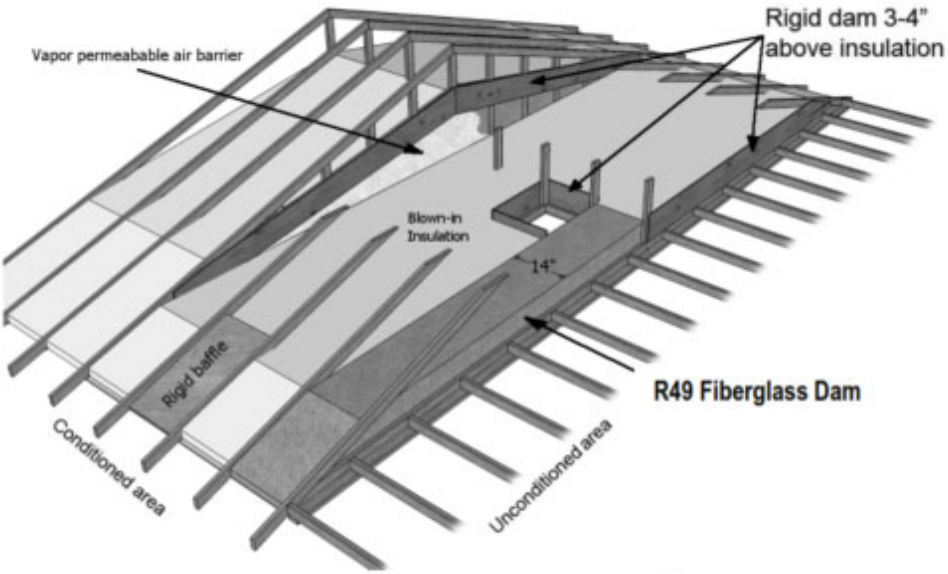

Figure 2 Illustration AT 1.4

AT 1.5—Baffles for Chimneys, Flues and Other Heat Sources

To prevent heat buildup, insulation shall not be in contact with fixtures as described on next page (see table 1.5b to determine baffle requirement). When needed, baffles shall keep the insulation at least 3", but not more than 4", from the sides of the heat-producing fixtures. Baffles shall extend at least 4" above the final level of insulation (See Illustration AT 1.5a).

Some unfaced fiberglass batt insulation and loose fill brands meet the ASTM E-136 noncombustible rating. Kraft paper facing does not meet this rating. Contractors may install non-combustible insulation (labeled as meeting ASTM E-136) with no clearance around double wall flues if permitted by local code.

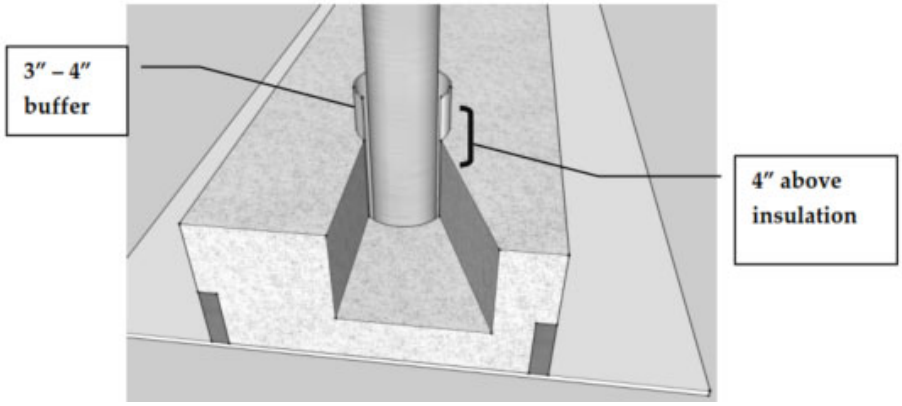

Figure 3 Illustration AT 1.5a

Heat-Producing Fixture Type	Baffle type for insulation rated as noncombustible (ASTM E-136)	Baffle type for insulation NOT rated as noncombustible
Metal flue	No Baffle Required	ASTM E-84 Compliant
Masonry Chimney	ASTM E-84 Compliant	ASTM E-84 Compliant
Transformers	ASTM E-84 Compliant	ASTM E-84 Compliant
Non-IC-rated vented fan/heater combination	ASTM E-84 Compliant	ASTM E-84 Compliant
Miscellaneous electrical	ASTM E-84 Compliant	ASTM E-84 Compliant
Non-IC-rated Recessed Light	No Baffle Required	No Baffle Required
Vented Exhaust Fans	No Baffle Required	No Baffle Required
Extra Low Voltage Electrical*	No Baffle Required	No Baffle Required
Modern Thermoplastic Insulated electrical wiring	No Baffle Required	No Baffle Required

Table AT 1.5b

*Extra-low voltage is defined as < 50Vrms AC, or < 120V DC.

ASTM E-136 compliant baffles are noncombustible and shall be made of rigid material (e.g., sheet metal) and secured with noncombustible mechanical fasteners. Tape is not a mechanical fastener.

ASTM E-84 compliant baffles are fire-resistant (e.g., gypsum board). If necessary, ASTM E-84 compliant baffles shall be secured using fire-resistant fasteners. All ASTM E-84 compliant baffles shall be rigid enough to maintain the required minimum spacing (see Illustration AT 1.5a).

AT 1.6—Bath and Exhaust Fans

All exhaust fans shall be vented to the exterior of the structure and secured to the exterior sheathing with no gaps to prevent exhaust air from re-entering the attic (see Illustration AT 1.6). At least one functioning damper shall be present in each system, either at the fan or where vented to the outside Exhaust ducts traveling through unconditioned space shall be insulated to prevent condensation.

Exhaust fans shall be vented to the nearest feasible location. Vent duct shall be sheet metal or HVAC flex-duct and insulated to a minimum of R-4 when required for code compliance. Vinyl coil duct is not allowed. Vent ducts shall not sag, shall be as straight as possible to maximize effective airflow, and shall have no more than two 90-degree turns, or equivalent. Sags, turns, bends and elbows restrict air movement and effective airflow from the exhaust device. If an attic vent is used for fan exhaust, it shall not be included in attic vent area calculations (see section AT 1.2).

Vent ducts shall be securely attached at each joint and to the fan housing using mechanical fasteners, such as screws or mechanically tightened metal clamp-type straps. Mechanical fasteners shall not interfere with damper movement. The exhaust boot assembly shall be securely and mechanically fastened where it vents to the exterior of the structure (see Illustration AT 1.6). Sealing materials such as duct tape, caulk and foam are not acceptable mechanical fasteners. UL listed Mastic, - or mastic tape may be used to seal gaps in exhaust ducts. Duct tape is not an approved material for sealing or supporting exhaust fan ducts.

Existing flexible plastic or metal vent ducts may remain if they are free of holes and kinks and are in otherwise good condition. Existing plastic or metal ducts shall be vented to the exterior, free of gaps and sealed to prevent exhaust air from re-entering the attic.

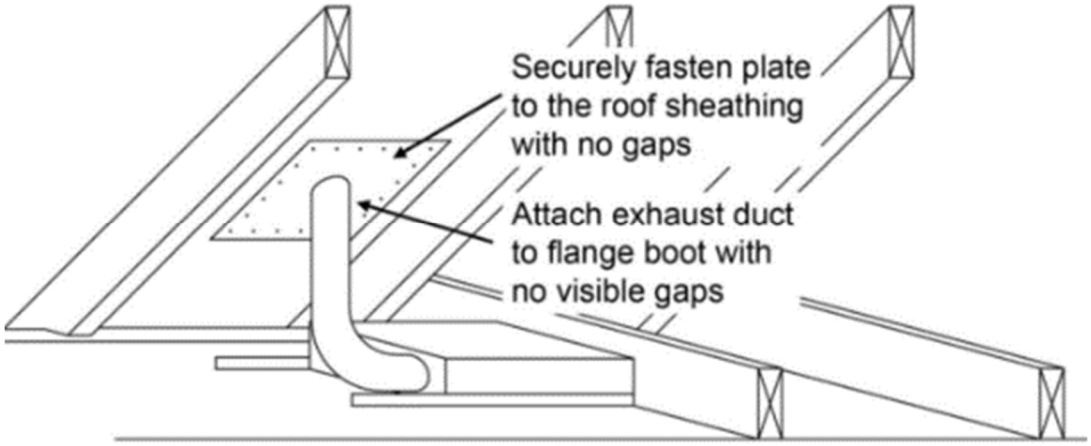

Figure 4 Illustration AT 1.6—Exhaust boot connected to sheathing.

AT 1.7—Kitchen Fans

Kitchen exhaust fans shall be vented to the exterior of the structure and secured to the exterior sheathing with no gaps to prevent exhaust air from re-entering the attic. Existing rigid or flexible metal ducts may remain, but existing plastic ducts shall be replaced. Sealing materials such as tape, caulk and foam are not acceptable mechanical fasteners. Mastic, UL- listed metal HVAC tape, or mastic tape may be used to seal gaps in exhaust ducts. Duct tape is not an approved material for sealing or supporting exhaust fan ducts.

If a new exhaust duct is required for a kitchen stove, it shall be at least 28-gauge galvanized steel, stainless steel, copper or aluminum and have a smooth interior surface. The exhaust duct shall be airtight and extend directly into a code-approved metal vent cap.

Vent duct shall be sized according to manufacturer's specifications. Vent ducts shall be securely attached at each joint and to the fan housing using mechanical fasteners. The exhaust duct shall meet manufacturer's requirements and all local building codes. At least one damper shall be functioning in each system, either at the fan or where it vents to the outside. Exhaust ducting shall be insulated to a minimum of R-4 when required for code compliance.

See UN 2.7 for downdraft exhaust fan venting requirements.

AT 1.8—Dryer Exhaust Fans

Dryer exhaust venting that travels through the attic shall comply with AT 1.6. Refer to UN 2.6 for dryer exhaust ventilation specifications.

AT 1.9—Water Pipes in Attics

If water pipes exist in the attic, they shall be insulated to meet specification UN 2.3.

If the water pipe passes through unconditioned space with substantial connection to outside, such as a well-ventilated attic, additional measures shall be taken to prevent burst pipes due to freezing:

1. Apply thermostatically controlled heat trace according to manufacturer's instructions or
2. Bury the pipe under the thermal envelope so that the pipe is substantially inside the thermal envelope.

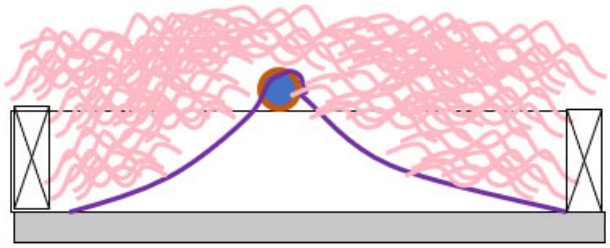

Figure 5 AT 1.7 Buried water pipe.

AT 1.10—Interior Attic Access Doors

All operable attic accesses opening to interior spaces shall be insulated, weather stripped and protected from having loose-fill insulation fall through the opening. Weatherstripping shall be permanently attached to create an effective air seal between the attic access frame and the door. Accesses with air leaks that cannot be weather-stripped shall be repaired or replaced prior to insulating. Weatherstripping shall not prevent easy operation of doors, latches or bolts.

All operable accesses shall remain operable unless the access is sealed off in favor of another existing or a newly created access. Work performed in an inaccessible area that will remain inaccessible after project completion shall be documented with photographs detailing the project's compliance with relevant specifications.

Ceiling accesses shall be insulated to R-30 with batt-type or rigid insulation. Knee wall accesses shall be insulated to a minimum of R-15.

Batt-type insulation shall be attached to the door with twine stapled to the edges of the door. Stapling the insulation directly to the door is unacceptable. Rigid insulation may be fastened to the door in lieu of batt-type insulation.

Alternatively, R-5 or greater rigid insulation installed between the access cover and a rigid protective material (OSB, plywood or other durable rigid material) attached over the entire access cover area is permissible. Insulation shall be sealed around the perimeter to the access cover using caulk, adhesive or spray foam. Access-cover assembly shall be tightly sealed using weatherstripping around the entire perimeter.

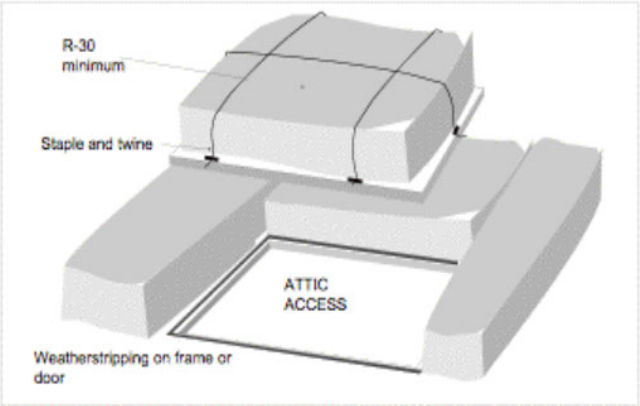

Figure 6: Illustration AT 1.10—Interior attic and knee wall accesses shall be insulated and weather-stripped.

Attic accesses shall be protected from having loose-fill insulation fall through the opening. The full level of ceiling insulation shall be maintained to the edge of the attic access opening by one of the following methods:

1. The opening may be framed with wood or plywood boards. The framing shall be permanently attached and extend at least 4" above the final level of insulation. Cardboard and foam board are not acceptable materials for attic access damming.
2. An insulation batt a minimum of 14½" wide laid flat, with an R-Value equal to that specified for the attic, may be placed tightly around the perimeter of the access opening. This 14½" width shall be maintained in all outward directions from the access opening, including corners. Insulation batts used as a dam shall be installed so that no gaps or voids exist.

AT 1.11—Pull-Down Stairs

Pull-down stairs in conditioned areas shall be weather-stripped and insulated to a minimum of R-10. Insulation and weatherstripping shall not prevent easy operation of the stairs. Factory or site-built pull-down-stair covers, or airtight boxes made of foam board and sealed with caulk, shall have a minimum of R-10. Factory-built pull-down-stair assemblies with a minimum R-5 insulation rating will be permitted provided the insulation is between conditioned space and the attic stair assembly and air infiltration is prevented by gaskets or weatherstripping.

AT 1.12—Exterior Attic Access Doors

Any outside access shall have a door that is easily opened to permit inspection and shall be weatherproof and vermin- proof.

AT 1.13—Vertical Walls in Attic Spaces

Any vertical wall in an attic that separates conditioned space from unconditioned space shall be sealed for air leaks and shall be insulated to fill the cavity. Insulation shall be secured and covered with a vapor-permeable air barrier. Vertical walls may include side walls of vaults, skylights, transitions in ceiling height or other surfaces. See AT 2.6 for Program requirements for rake and crown attics.

In cases where no wall exists between conditioned and unconditioned space, a wall shall be constructed using a rigid, permanent material, air leaks shall be sealed, and insulation shall be installed.

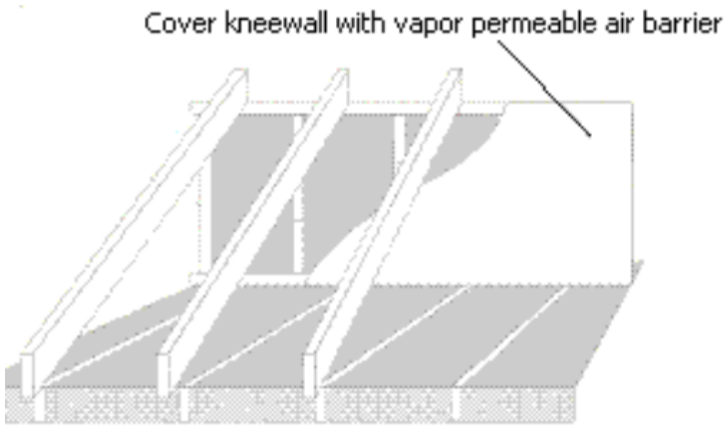

Figure 7: Illustration AT 1.13

AT—ATTIC INSULATION: INSTALLATION

AT 2.0—General Attic Insulation Requirements

Attic insulation shall be in contact with the conditioned area of the home and shall be installed so there is no air space between the insulation and the conditioned area.

Degradable and absorbent scrap materials, especially wood and cardboard, shall be removed from the attic. The roof and attic shall free from water leaks and moisture damage prior to performing work.

In attics with no existing insulation, vapor retarders, such as kraft facing on fiberglass batts, shall face the conditioned area of the building. New insulation with a vapor retarder shall not be installed on top of existing insulation. Insulation assemblies shall have no more than one vapor retarder, and it shall be in contact with the conditioned surface.

If existing attic insulation has a vapor retarder on its top surface, remove the vapor barrier from the insulation material, replace the insulation material, or reorient the existing insulation so vapor retarders are in contact with the conditioned surface.

If the added attic insulation compresses the existing insulation, the final R-Value shall be the Program required minimum or greater. After installing the insulation, eave and soffit vents shall remain unblocked. When lower ventilation exists (at the eaves), baffling is required to ensure effective R-Value by preventing wind washing of insulation and to allow for ventilation air flow. Refer to AT 1.3 for baffling requirements.

AT 2.1—Installing Loose-Fill Insulation

Loose-fill insulation shall be level and smooth with a uniform R-Value. Installation of loose-fill insulation shall comply with baffling and damming requirements as defined in AT 1.3, 1.4 and 1.5. Toward the eaves, where a sloping roof prevents insulation from being installed to Program minimums, insulation shall be installed up to the roof decking to maximize R-Value. In soffit-vented assemblies, insulation shall be installed up to the baffles. If new insulation will be blown over existing insulation, the existing insulation

shall be in contact with the air barrier. Installer shall apply insulation per the manufacturer's coverage chart. No reduction allowed for areas where the roof or baffles reduce the depth of insulation.

AT 2.2—Installing Batt-Type Insulation

If batt-type insulation is installed, prepare the attic in the way described for loose-fill insulation. As stated in AT 2.0, do not install vapor retarders over existing insulation. In attic areas where no insulation exists, batts with vapor retarders may be used. The vapor retarder shall be in contact with the ceiling.

Batts shall be cut to fit and placed tightly together with no gaps, except those required for clearance around heat- producing fixtures. Where practical, place one row of batts between the joists and another row of batts on top of the first row and at right angles to the joists. When lower ventilation exists, baffling is required to ensure effective R-Value and prevent wind washing of insulation. Refer to AT 1.3 for baffling requirements.

When installing foam insulation products, the manufacturer's name, product identification and information to determine the end use shall be left with the homeowner and presented to a Program representative for review during the QA process. Foam insulation shall comply with thermal and ignition barrier code requirements for foam plastics as defined by local building code.

AT 2.3—Floored Attics

Cavities below decked storage areas above a conditioned space shall be insulated to the highest practical level. To fill cavities, decking shall be removed, or holes drilled no more than 4 feet apart. If loose-fill insulation is used, joist cavities shall be tightly packed (3.5 lbs. per cubic foot) with insulation. Refer to manufacturer's coverage chart or monitor the bag usage while insulating, track the bag usage and adjust the blower machine accordingly to achieve desire density Decked storage areas shall not be included in the square footage calculation of the insulation incentives when they are insulated to less than Program minimums and exceed 5% of the attic area or 64 sq. ft., whichever is greater. When decked storage areas are less than 5% of the attic area or 64 sq. ft., they may be included in the incentives area calculation. When unusual circumstances allow for only the cavity to be filled, contact the Program for incentive information. Refer to AT 1.4 for damming requirements for decked storage areas.

AT 2.4—Vented Vaulted Ceilings

If insulation is added to a vented vaulted ceiling, a 1" air space shall be maintained above the insulation. Each cavity shall have an upper and a lower vent.

AT 2.5—Unvented Vaulted Ceilings

If insulation is added to an unvented vaulted ceiling, it shall be filled with tightly packed insulation.

AT 2.6—Insulating Rake and Crown Attics

When insulating rake and crown attics, a continuous thermal boundary shall be created to be considered a complete measure. If rake attics are considered unconditioned space, knee wall accesses shall be insulated to R-15 and weather-stripped to create an effective air seal. If the rake is used for storage, fibrous knee wall door insulation shall be covered to prevent human contact. Refer to IN 1.7 for further information. Foam-core doors with a minimum R-5 insulation rating (manufactured for exterior use) will

be permitted in knee wall door installations, provided gaskets or weatherstripping prevent air infiltration around the entire door perimeter.

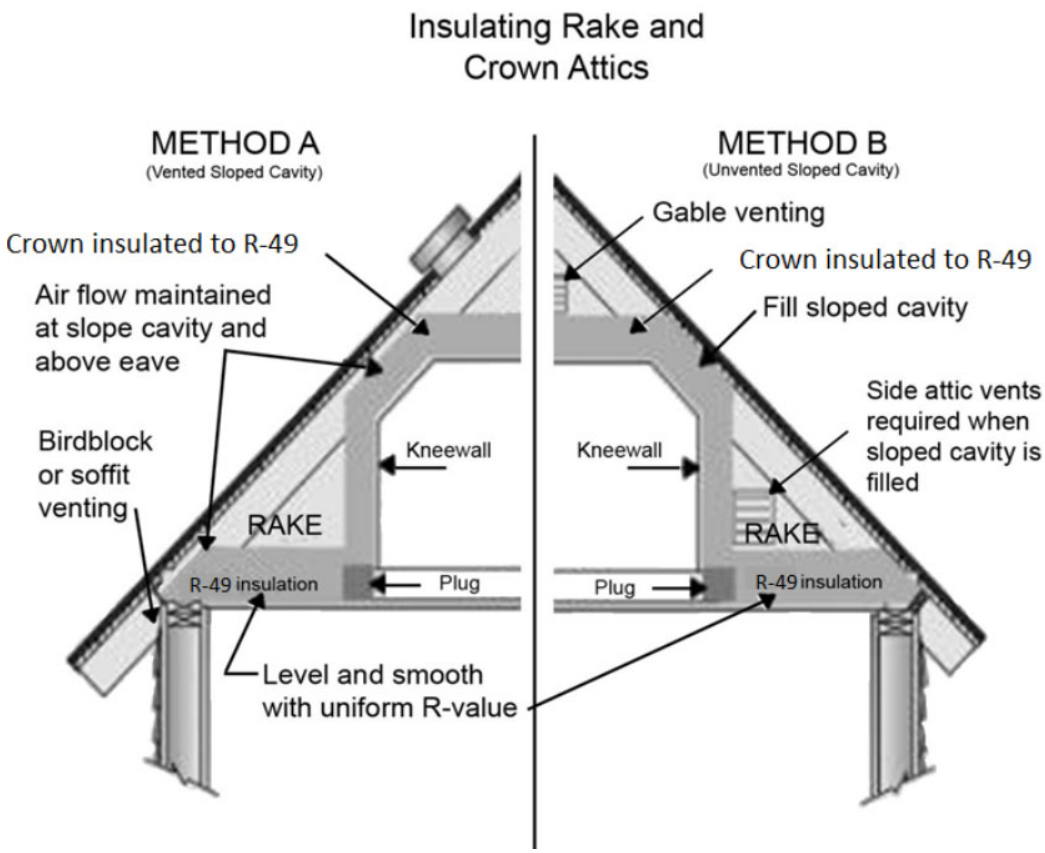

Figure 8: Illustration AT 2.6

Use one of the following methods to treat a rake and crown attic. In all cases, the sloped cavity and crown shall be insulated unless physical barriers exist.

Method A

If the upper and lower passive ventilation calculation requires air to move from rake to crown, a 1" air space shall be maintained between the insulation and the roof deck with continuous baffle or equivalent. Knee walls shall be sealed for air leaks and shall be insulated and covered with a vapor-permeable air barrier. Knee walls shall be treated according to this requirement, regardless of existing insulation levels. Cavities where the knee wall reaches the rake floor shall be plugged with an air barrier and sealed using caulk or foam. Rake insulation shall be in contact with plugs. Refer to Illustration AT 2.6.

Method B

If rake and crown attic spaces have adequate ventilation independently, the sloped cavity may be completely filled. Loose-fill insulation may be used as long as the lower opening of each cavity is dammed with a rigid, vapor-permeable material to prevent insulation from falling out of the cavity.

Knee walls shall be sealed for air leakage and shall be insulated and covered with a vapor-permeable air barrier, regardless of existing insulation levels. Cavities where the knee wall reaches the rake floor shall be dammed or plugged with an air barrier and sealed using caulk or foam. Rake insulation shall be in contact with plugs. Refer to Illustration AT 2.6.

Method C

Bring the crawl spaces behind the knee wall inside.

Insulate sloped ceiling and crown per AT 2.6 Method B. Insulate roof in lower crawlspace per AT 2.8.

AT 2.7—Interior Roof Insulation

Open attic spaces may also be treated as conditioned space if air-impermeable (2lb. per cu. ft. spray foam , XPS rigid insulation) or polyisocyanurate insulation is installed. Air-impermeable insulation includes spray foam, rigid foam with appropriate sealants, or other materials as defined by the International Residential Code, or IRC. Insulation shall fill the roof rafter cavity, and all roof framing shall be insulated to a minimum of R-3. If rigid board is used, all seams shall be sealed using foam or caulk. Refer to IN 1.4 for foam insulation requirements.

If insulation is not considered a vapor retarder, then a vapor retarder shall be installed on the conditioned side of the insulation. Recommend using “Smart” vapor retarders. If the space is to be habitable or if there is a combustion appliance in the zone, required thermal and ignition barrier requirements shall be met.

AT 2.8—Low-Sloped, Flat Roofs and Exterior Roof Insulation

Building permits and code compliance are the responsibility of the homeowner and Trade Ally. Program preapproval is required for all low-sloped and flat roofs that cannot be insulated to Program minimum requirements.

When installing rigid insulation on top of or beneath roof sheathing, the overall assembly shall be insulated to a minimum of R-20, or recommended values stated by the International Residential Code, or the highest R-value approaching R-20 which is practical. Insulation shall not be applied to roofs over ventilated cavities. (e.g., vaulted ceilings) with ventilated spaces, attics, sloped ceilings connected to attics and/or knee wall spaces, etc. Ventilated cavities of flat or sloping roofs shall not be blocked. Insulation shall be in a rigid board form and roof drainage systems shall function after insulation is installed. Recessed lights in insulated cavities shall be Insulation Contact and Air Tight (ICAT) rated. All penetrations through the roof covering and all joints between the roof covering and vertical surfaces (e.g., walls, chimneys, etc.) shall be flashed and sealed.

When installing rigid insulation on top of or beneath roof sheathing verify that the building thermal envelope is contiguous from the roof thermal barrier to the that of the wall and gable thermal plane.

DU—DUCT SEAL AND INSULATION

DU 1.0—Introduction

To be eligible for the Duct Seal/Duct Insulation incentive, the existing insulation shall be R-2 or less. If the R-value of the existing duct insulation or flex duct is not clearly identified, R-2 shall be interpreted as 1" of duct insulation or less. Insulation installed on ducts in conditioned space is not eligible for Program incentives. Unfinished or partially unfinished basements that contain HVAC ducts or have a direct access to the interior conditioned space of a home shall be considered conditioned space.

To be considered a complete measure and eligible for incentives, duct insulation shall:

1. Comply with complete measure guidelines listed in section IN 1.0.
2. Comply with carbon monoxide alarm guidelines listed in section DU 1.1.
3. Provide homeowner Care for Your Air: A Guide to Indoor Air Quality (EPA).
4. Bring all accessible ductwork in unconditioned space into compliance with the applicable requirements listed in Section DU.

DU 1.1—Combustion Safety

Duct sealing can alter the performance of combustion appliances by reducing the amount of available combustion air and can create zones of increased negative pressure. A combustion appliance is any fuel-burning appliance including ovens, dryers, water heaters, and space heating systems that utilizes natural gas, propane, oil, kerosene, or wood. Duct sealing can cause increased concentrations of pollutants and humidity within the dwelling due to reduced natural air exchanges.

It is the responsibility of the Trade Ally to ensure that all combustion appliances contained within the confines of the structure are properly and safely vented, operating, and have suitable combustion air before and after duct sealing occurs and to ensure that all applicable state/local laws, codes, and standards are met, and the indoor air quality of the dwelling is not compromised.

Homes with unvented combustion heating appliances are not eligible for duct sealing incentives.

A functioning and properly installed (in accordance with manufacturer's specifications) UL-listed carbon monoxide alarm is required when a combustion appliance is present within the confines of the structure when duct sealing is performed. Homeowners shall be made aware of the alarm and instructed how to operate, test, and maintain the alarm. See IN 1.10—Combustion Safety

A combustion appliance zone (CAZ) is an enclosed area containing a combustion appliance for the purpose of space heating or water heating.

The Program recommends following CAZ testing procedures and requirements outlined by industry recognized organizations including, but not limited to, Building Performance Institute, RESNET, or ACCA.

DU 1.2—Duct Sealing

All new and all accessible existing HVAC supply and return ducts, air handlers, and plenums outside the conditioned space shall be sealed at all joints and corners, including prefabricated joints. It is unnecessary to seal longitudinal seams unless they are damaged.

DU 1.2a—Duct Repair

Inferior sections of duct—such as rusted, crushed or disconnected sections or sections otherwise ineffective—shall be repaired or replaced before duct sealing is performed. When there are large gaps in sheet metal or duct connections, repairs shall be made using sheet metal, sheet metal screws, and/or mastic and mesh-reinforcing tape. Disconnected, loose-fitting or new metal ducts shall be secured using at least three sheet metal screws at each connection.

DU 1.2b—Duct Support

To minimize sagging, ducts shall be supported with durable supports. Flexible ducting supports shall be listed as UL-181 approved, be at least 1½" wide and not restrict airflow. Flexible ducting shall be supported within 3' of each connection to a hard duct. If possible, ducts shall be supported above the ground. When contact with the ground is unavoidable, closed-cell rigid insulation shall be placed under the ducts.

DU 1.2c—Duct-Sealing Materials

Ducts shall be sealed using pliable, water-based mastic labeled as meeting UL-181 standards. Gaps greater than ⅛" shall be reinforced using mesh-reinforcing tape before applying mastic. Boot-to-floor connections shall be sealed with caulking, pliable mastic or expanding foam. Foil or mastic HVAC tape labeled as meeting UL-181 standards may only be used on the air handler.

DU 1.2d—Duct-Sealing Opportunities

All accessible connections of the supply and return plenum and trunkline, and all accessible takeoffs, runs and boots—including the gores on adjustable elbows—shall be sealed with approved materials. The following target areas are listed in order of priority:

1. Plenum.
2. Plenum-to-takeoff connections.
3. Remove existing loose tape before applying mastic.
4. Branch Ts, Ys and Ls.
5. Add three screws to each duct connection.
6. Duct-to-duct connections.
7. Gores on adjustable elbows.
8. Finger/dovetail joints.
9. Boots.
10. Boot-to-floor, boot-to-wall and boot-to-ceiling connections.
11. Air-handler cabinet to return and base can.

The presence of insulation alone shall not be considered a barrier to accessibility. Loose tape shall be removed from rigid ducts prior to sealing. Secured tape shall be completely covered with mastic, which shall extend at least ½" beyond the tape edge on either side and be at least ⅛" thick.

DU 1.2e—Flexible Ductwork

All flexible ducts shall be joined to a section of rigid duct of matching diameter, including locations where two separate sections of flex duct meet. Both the inner and outer lining shall be tightly fastened using a compression strap tightened with a tool designed for that purpose. Tape may remain as long as a

compression strap is installed to maintain a permanent connection. Flexible ducting shall be supported and comply with UL-181 requirements.

DU 1.3—Duct Insulation

Insulate all ducts in unconditioned areas to Program minimums. Pay special attention to elbows and termination areas to ensure complete coverage. Do not pull the insulation too tight as this will compress it and decrease its R-value.

Do not insulate over flex ducts or preformed fiberglass duct board and remove duct board insulation that is R-2 or less. Secure-insulation to ductwork every 12" with rot-proof twine, noncorrosive wire or manufacturer-approved vinyl tape if the insulation is vinyl-backed.

Duct insulation installed in basements, garages, storage areas or other human contact areas shall be covered to limit occupant exposure to insulation fibers (see section IN 1.7). Covering shall meet applicable fire codes.

Air conditioning ducts in unconditioned spaces should have a continuous Class I vapor retarder to avoid condensation if required by code.

DU 1.4—Manufactured Homes Duct Sealing

The definition of a manufactured home is "a structure, transportable in one or more sections" and "is built on a permanent chassis and designed to be used as a dwelling with or without a permanent foundation when connected to the required utilities, and includes the plumbing, heating, air conditioning, electrical systems contained therein" (source: Part 3280, Manufactured Home Construction and Safety Standards, Oct. 1994). For purposes of this specification, the definition of manufactured homes will also include older homes manufactured in factories and hauled over the road to the home site and regulated by U.S. Department of Housing and Urban Development (HUD).

Where applicable, all ducts shall be installed, sealed, and supported in compliance with section DU.

Any portion of an HVAC duct that extends beyond the last register shall be blocked off with end caps and sealed. End caps must be made of either sheet metal or UL-181 approved rigid product.

The crossover ducts shall be installed to prevent compressions or sharp bends, minimize stress at the connections, avoid standing water, and avoid excessive duct lengths. When skirting is not present, the crossover duct shall be protected against rodents, pets, etc. Crossover ducts shall be secured with mechanical fasteners (e.g., stainless steel worm drive clamps, plastic/nylon straps applied with tightening tool, etc.) and sealed with mastic.

Where clearances permit, the crossover duct shall be supported above the ground by strapping or blocking. Min R-4, 1” foam board between duct and ground contact is permitted.

If a non-ducted return-air system is in the floor or ceiling cavity, it shall be eliminated. Seal all return-air openings in the floor or ceiling and seal the main return-air opening in the floor or ceiling of the furnace closet. Return air shall be provided through grills in the furnace closet to the conditioned space. These grills shall be adequately sized for the installed heating system. All interior doors shall be undercut, or other means provided, to allow return air to flow back to the furnace closet. If the rodent barrier has been removed and batt insulation has been installed in the floor, all HVAC ducts, boots and plenums shall be sealed.

UN—UNDERFLOOR INSULATION: OVERVIEW

UN 1.0—Introduction

Underfloor weatherization measures include adding insulation, sealing floor penetrations, adding ventilation, installing a ground cover and adding water pipe insulation. Insulation shall be installed to reduce heat loss between conditioned space and unconditioned space or to the outside of the house. To be considered a complete measure and eligible for incentives, floor insulation shall:

1. Comply with the complete measure guidelines listed in section IN 1.0.
2. Be installed in an area of unconditioned space with an existing R-Value not exceeding Program maximums.
3. Bring the connected accessible unconditioned space into compliance with the applicable requirements listed in Section UN (Refer to Illustrations UN 1.0a through UN 1.0d).

Only the area of the floor meeting the pre-existing insulation requirement is eligible for floor insulation incentives. The Program does not require that areas with existing floor insulation over the pre-existing requirement receive additional insulation or support techniques.

In general, situations where insulation has been contaminated by vermin or flood damage shall not be used for de-rating insulation R-Value. If there is a situation where such damage is obvious, contact [program contact] about the situation by providing a description of the square footage affected and photographs of the damage.

Insulation installed on the exterior walls of a crawlspace or on the foundation walls of a basement where underfloor insulation is part of the work scope is not eligible for incentives.

Insulation shall be installed so there is no air space between the insulation and the floor. Insulation that is not in continuous contact with the bottom of the subfloor is not eligible for incentives.

Refer to IN 1.11 for the Program's procedure for determining the R-Value of existing insulation.

Illustrations UN 1.0a through UN 1.0d provide guidance for installing incentive-eligible floor insulation in a variety of situations:

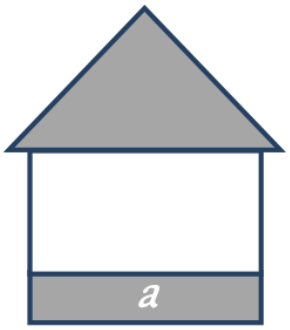

Figure 10: Illustration UN 1.0a

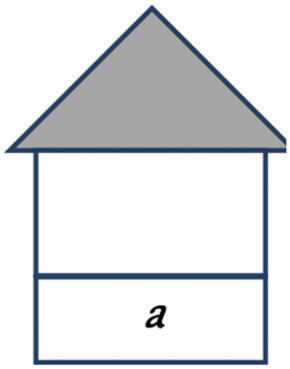

Figure 9: Illustration UN 1.0b

UN 1.0a: An unconditioned crawlspace under the entire living space. The entire crawlspace area “a” shall be brought into compliance with the requirements of Section UN.

UN 1.0b: A full conditioned basement. Conditioned basements are ineligible for floor insulation incentives. Refer to UN 2.8.

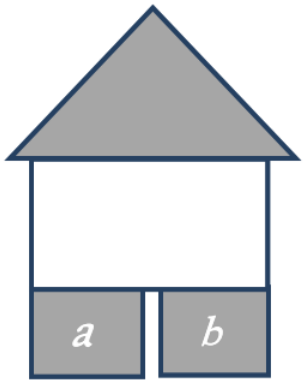

Figure 12: Illustration UN 1.0c

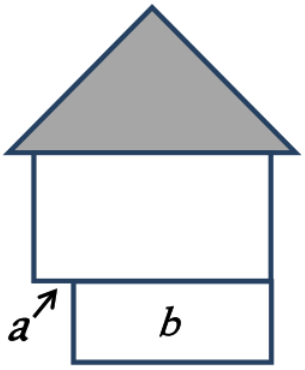

Figure 11: Illustration UN 1.0d

UN 1.0c: Two unconditioned crawlspaces physically separated from one another. Only the specific area where floor insulation is being installed— “a” or “b”—is required to comply with Section UN.

UN 1.0d: A cantilever (or overhang). Only area “a” is required to comply with Section UN.

UN 1.1—Underfloor Preparation and Debris

Degradable and absorbent scrap materials, especially wood and cardboard, shall be removed from the crawlspace. The underfloor shall be checked for water leaks and wood decay before and after work occurs. The homeowner shall be notified, and corrective measures shall be taken, when necessary.

UN 1.2—Ventilation

Crawlspaces enclosing unconditioned space shall be ventilated by openings in exterior foundation walls. Such openings shall have a net area of at least 1 sq. ft. for each 150 sq. ft. of underfloor area. Where moisture due to climate and groundwater conditions is not considered excessive, the Program may allow operable louvers and the required net area of the vent opening to be reduced to 1/300 or less (minimum 1/1,500), provided the underfloor ground surface area is covered with an approved ground cover. (see UN-1.3). Vent openings shall be secured to prevent the entry of vermin or other animals.

Openings shall be located as close to corners as practical and shall provide cross ventilation. The required area of such openings shall be equally distributed along the length of at least two opposite sides. Vents shall be covered with corrosion-resistant wire mesh, with mesh openings not to exceed ¼" in dimension. Existing vent openings covered with wire mesh need not be modified, except when modification is necessary to prevent the entry of vermin or other animals.

Crawlspace ventilation shall not be blocked by insulation or other material. Baffles shall be installed around ventilation that has been blocked to ensure proper airflow. Where venting cannot be reasonably added except by breaching a foundation, ventilation requirements shall be waived.

If continuously operated mechanical exhaust ventilation is provided at a rate of 1.0 CFM per 50 ft2 of floor area, ventilation openings may be omitted.

UN 1.3—Ground Covers

All crawlspaces require a ground cover. All ground covers shall be a minimum of six-mil black polyethylene (Class 1 vapor barrier - perm rating of 0.1 perms or less). If an existing ground cover does not meet these specifications, it shall be repaired, or a new ground cover shall be installed. All seams shall be lapped at least 6"and sealed or taped. The cover shall be continuous, with no rips, tears or gaps. Exposed soil or earth in a basement shall comply. Crawlspaces with a concrete floor, commonly referred to as a “rat slab”, do not require a ground cover as long as the concrete is continuous and in good condition. Gaps, cracks or holes in the slab shall be filled or sealed with an appropriate sealant or concrete repair material.

UN 1.4—Sealing Floor Penetrations

To prevent transmission of water vapor and to support the effective R-Value of the underfloor insulation, all floor penetrations shall be sealed, including plumbing, wiring and duct penetrations, floor transitions, and similar openings in the air barrier of the underfloor. Caulk, foam or other compatible sealants shall be used.

Open chases around chimneys that extend into the crawlspace shall be sealed using fire-rated materials. Spans greater than ¾" shall be bridged using sheet metal and ASTM E-136 rated caulk within 3" of masonry chimneys and flues.

Bathtub/shower drain accesses shall be sealed. If the drain trap is above the level of the floor, provisions to maintain accessibility for maintenance shall occur.

Illustration UN 1.4

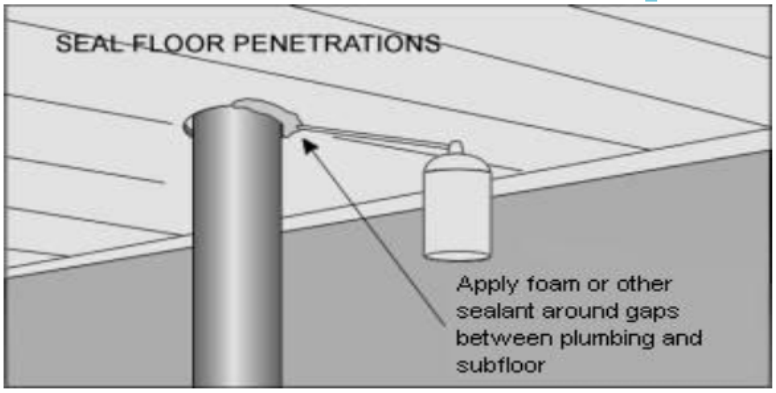

Figure 13: Illustration UN 1.4

UN 1.5—Floors Above Other Unconditioned Areas

If the ceiling of a garage, service area, storage area or other unconditioned space (not including basements) serves as the floor of a conditioned space above, this ceiling may be insulated to obtain a floor insulation incentive. Existing conditions shall comply with current Program standards for floor insulation, and the measure shall meet all the relevant requirements in Section UN.

UN 1.6—Rim Joist Insulation

In conditioned basements, the sill plate and each joist bay shall be sealed for air leaks before installing insulation. Gaps between the sill plate and foundation wall shall also be sealed for air leaks. Batt-type or foam insulation used in this application shall be tightly installed, securely fastened, and at least R-15, and shall comply with applicable state and local jurisdictional codes. A human contact barrier shall be installed over batt-type insulation. Foam insulation used to insulate rim joists shall comply with applicable requirements in Section IN 1.4.

UN—UNDERFLOOR INSULATION: INSTALLATION

UN 2.0—General Installation Requirements

Floor insulation shall be in contact with the floor. Use of unfaced batt-type insulation is acceptable. There shall only be one vapor retarder in the assembly, and it shall be in direct contact with the subfloor and face the conditioned space of the home.

Kraft facing, commonly attached to batt-type insulation, is a vapor retarder. If kraft facing is attached, it shall be in contact with the conditioned floor of the home.

Slight compression of insulation is acceptable to maintain continuous contact with the bottom of the floor. Insulation shall be in continuous contact with the floor and fill the entire cavity depth, from the bottom of the subfloor to the bottom of the joist or beam. Insulation shall also be in contact with the joists that frame the cavity. The batt insulation installed into joist cavities shall be slightly wider than the cavity in order to fill the cavity and fit the insulation more securely in place.

Insulation shall not be compressed into framing cavities not meeting manufacturers recommended thicknesses, therefore 9.25” cavity thickness is required for standard density R-30 fiberglass batting. Floor cavities with less than a 9.25” cavity thickness can still qualify provided the framing or insulation support material is extended down or other insulation materials or techniques (or combination of) are used that have a higher R-value per inch, e.g., mineral wool batts, net and blow, spray foam, or rigid foam board. Foam insulation shall comply with applicable requirements in Section IN 1.4. R-30 high density fiberglass batts installed in a 7.25” cavity do not meet the intent of this specification.

Insulation installed into a joist cavity taller than 10" shall maintain continuous contact with the floor and meet all other relevant specifications outlined in Section UN.

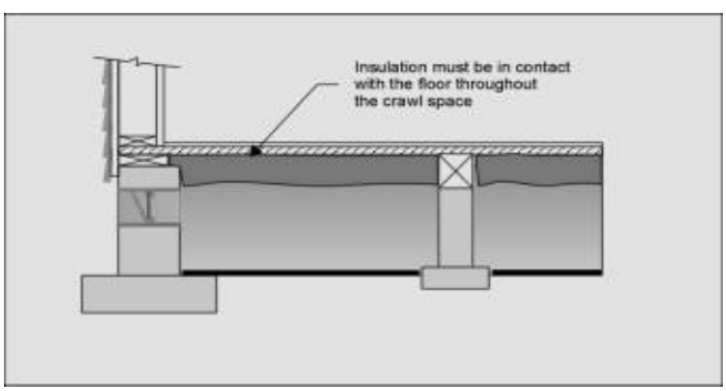

Figure 14 Illustration UN 2.0a

Insulation shall be pulled free from any temporary stapling. Insulation shall be cut to fit without gaps or overlaps. There shall be no gaps at the perimeter of the foundation.

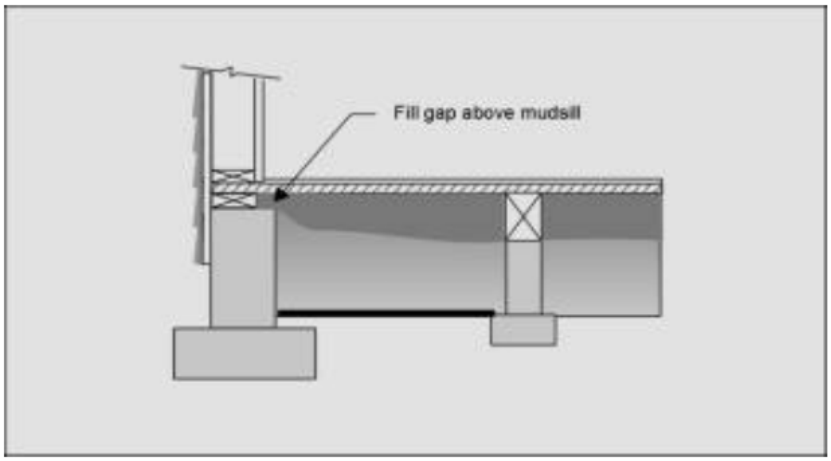

Figure 15: Illustration UN 2.0b

Insulation shall be supported so it does not block or restrict crawlspace ventilation. If necessary, insulation may be compressed to meet this requirement.

UN 2.1—Floor Insulation Support Materials

Use one of the following materials to support floor insulation:

- **Wood lath**—Wood lath shall be a minimum of ¼" x 1".
- **Twine**—Twine shall be non-stretching polypropylene or polyester.
- **Wire**—Wire shall be stainless steel, copper or an equivalent material of similar corrosion resistance, with a minimum diameter of 0.04" (size 18 AWG).

Self-supporting wire hangers are not acceptable.

Hand stapling is not a durable fastening technique and will not qualify a project for Program incentives.

Fasteners for lath, twine or wire may be one of the following: hot-dipped galvanized nails, screws or corrosion-resistant staples that are at least 18 gauge and long enough to penetrate wood at least ⅝".

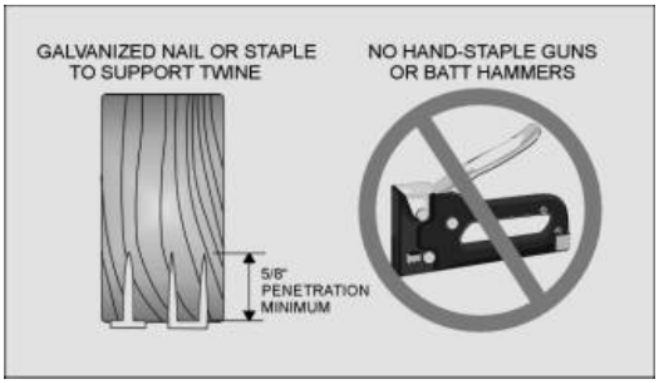

Figure 16: Illustration UN 2.1

UN 2.2—Spacing Requirements for Support Systems

Staples shall be driven with a power-actuated stapler to achieve at least ⅝" penetration. The maximum spacing for support systems is as follows:

Table 1: UN 2.2

Spans	Maximum Spacing
24” or less	18” apart
48”	12” apart
60”	8” apart
72”	6” apart

Wood lath shall not be used for spans greater than 48". Splicing does not meet this requirement. Wood with a thicker dimension may be used for wider spans.

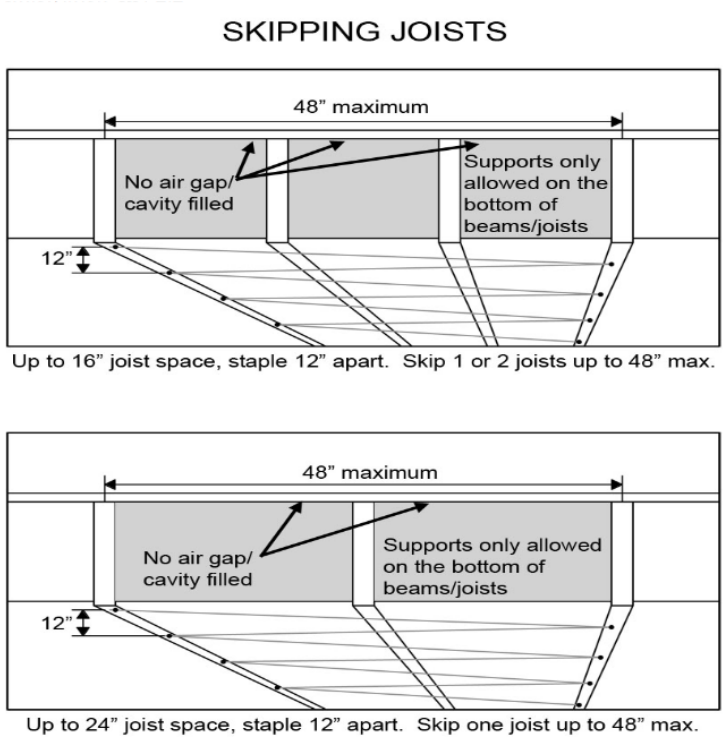

Insulation shall be supported so that it is in direct contact with the bottom of the subfloor sheathing.

Figure 17: Illustration UN 2.2

Support systems for spans greater than 72" or support systems not secured to the bottom of the joists require prior approval by the Program. Batt-type insulation shall be supported no more than 3" from the ends. This support shall be parallel to the end of the batt. Small pieces of insulation shall be supported.

UN 2.3—Water Pipe Insulation

All hot and cold-water pipes not enclosed within the floor insulation shall be insulated to a minimum of R-3. Leaking water pipes shall be repaired before insulating them.

All water pipe insulation shall be secured with twine, corrosion-resistant wire or plastic compression ties. Duct tape is not allowed to secure water pipe insulation. Do not cover the handles and spigots of safety drain valves with insulation.

Fiberglass insulation shall have a minimum finished thickness of 1", be in continuous contact with the water pipe, and be secured every 12". Insulation shall be secured to the beam at a minimum of every 12" when water pipes run next to a beam or joist.

Preformed insulation shall be properly sized. Corners shall be mitered to fit tightly. The inside diameter of the preformed insulation shall match the outside diameter of the water pipes. Preformed insulation shall be supported every 24" and within 3" of the ends. If connections and corners are larger than piping, exposed joints shall be insulated with fiberglass or within 3" of the ends. If connections and corners are larger than piping, exposed joints shall be insulated with fiberglass or preformed insulation equal to the outside diameter of the connection and corners.

If the water pipe passes through unconditioned space with substantial connection to outside, such as a well-ventilated crawlspace or skirted mobile home, additional measures shall be taken to prevent burst pipes due to freezing. Apply thermostatically controlled heat trace to water pipes in the space according to manufacturer's instructions.

UN 2.4—Inside Access Doors for Under-floors

All operable accesses between unconditioned and conditioned spaces shall be insulated to R-25 for floor hatches and R-15 for doors in walls. Insulation shall be securely fastened to access doors using staples and twine or a similar method that ensures the effectiveness and durability of the insulation. Inside access doors shall be weather-stripped.

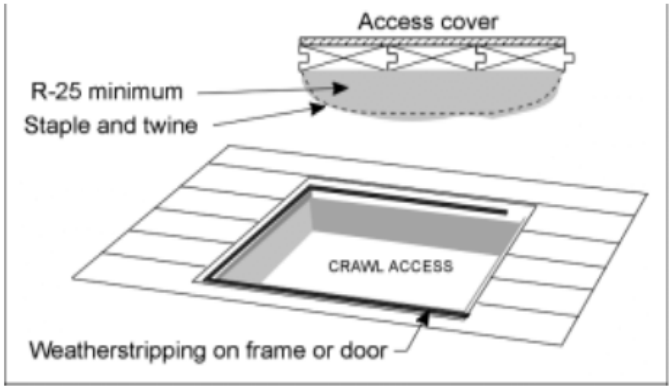

Figure 18: Illustration UN 2.4

Alternatively, R-5 or greater rigid insulation installed between the access cover and a rigid protective material (OSB, plywood or other durable rigid material) is allowed. Insulation shall be sealed around the perimeter to the access cover using caulk, adhesive or spray foam. The rigid protective material shall be mechanically attached to the access cover to securely hold insulation in place. The access cover assembly shall be tightly sealed using weatherstripping around the entire perimeter.

All operable accesses shall remain operable unless an access is sealed off in favor of another existing access or a newly created one. Work performed in an inaccessible area that will remain inaccessible after completion shall be documented with photographs detailing the measure's compliance with relevant specifications.

UN 2.5—Outside Access Doors for Under Floors

Any outside access shall have a door that is easily opened to permit inspection and shall be weather and vermin-resistant. A vertical access door may be screened when it is part of the crawlspace ventilation system. Horizontal hatch covers shall shed water. Wood in contact with soil or concrete shall be pressure treated.

Existing covers are acceptable if they are in good condition and are weather and vermin-resistant.

UN 2.6—Dryer Exhaust

Dryer exhaust ducts shall be vented to the exterior of the structure, be sealed to prevent exhaust air from entering the building, have a damper, and terminate in a code-approved vent cap. New dryer ducts shall be rigid metal, securely connected with mechanical fasteners and permanently supported. Exhaust systems shall comply with local code and manufacturer specifications, be as straight as practical, and not exceed 25'. To prevent blockage with lint, dryer vent ducts shall not be connected with screws. Use a metal clamp or UL-181 rated foil tape to secure dryer duct connections.

UN 2.7—Downdraft Exhaust Ducts

Downdraft exhaust ducts may have a 90-degree turn and shall exit through the foundation or exterior wall. They shall be sealed (with no visible gaps) to prevent exhaust air from entering back into the building, and end in a code-approved vent cap.

UN 2.8—Vertical Walls in Underfloor Spaces

Uninsulated walls between conditioned and unconditioned spaces in the underfloor area shall be sealed for air leaks, insulated to a minimum of R-15 and create a continuous thermal envelope. The floor cavities between joists that connect adjacent conditioned space to unconditioned space shall be sealed with a rigid air barrier. When no wall exists, one that extends to the bottom of the subfloor shall be constructed and an effective pressure and thermal boundary shall be installed.

UN 2.9—Installing Foam Insulation

Spray foam insulation may be used for insulating and air sealing an underfloor area either on its own or in combination with other insulation types (such as flash and batt – a thin layer of spray foam applied to the sheathing and then covered with batt insulation). This assembly shall meet the requirements for R-Value, be in contact with the conditioned surface, comply with manufacturer specifications, and comply with the thermal and ignition barrier requirements for foam plastics as defined by the prevailing

jurisdictional building code. There shall be no gaps or voids in the insulation assembly and shall meet all other applicable underfloor specifications.

Spray foam is exempt from support requirements. When used in combination with other insulation types, spray foam shall be installed in contact with the conditioned surface of the home.

When installing foam-insulation products, the manufacturer's name, product identification and information to determine the end use shall be left with the homeowner and presented to Program representative for review during the QA process. Refer to IN 1.4 for further requirements for foam insulation.

UN 2.10—Miscellaneous Underfloor Specifications

Underfloor areas that allow easy human access shall comply with the requirements defined in IN 1.7 to protect occupants from encountering fibrous insulation in areas where routine storage or maintenance occurs.

An air barrier or skirting shall protect underfloor insulation exposed to the wind, including un-skirted crawlspaces and cantilever floors.

Unconditioned unvented basements with concrete floors and walls do not require a ground cover, foundation vents or water pipe insulation, except for pipes located on exterior walls. Unconditioned vented basements with concrete floors and walls do not require a ground cover, but water pipes shall be insulated according to UN 2.3.

Basements with exposed soil or earth shall have a ground cover installed on exposed areas.

If standing water is found in the crawlspace, it must be drained and water intrusion mitigated before the Insulating the floor. A sump pump may be needed for some situations. Draining and mitigating the water intrusion is the responsibility of the homeowner.

Before installing insulation in contact with active knob and tube wiring, the electrical system shall be inspected and the homeowner shall receive written approval by a licensed electrician. Insulating floors with knob and tube wiring shall be at the discretion of the contractor and homeowner and adhere to state and local code.

CS-CRAWLSPACE INSULATION

CS 1.0—General Installation Requirements

An alternative strategy for insulating crawl spaces is to bring the crawl space inside. This involves applying a vapor barrier to the floor of the crawl space, insulating the exterior walls adjacent to ambient temperature as well as insulating against heat loss below grade.

CS 1.1 Crawl Space Safety Considerations

Crawl spaces are confined spaces that may warrant certain safety considerations depending on access, ventilation and the nature of the work. See IN 1.14

Remove abandoned items to clear the space of items that may puncture the vapor barrier. Seal any vents through the exterior wall.

CS 1.2 Crawl space floor.

See **UN 1.3-Ground Cover**

CS 1.3 Wall Insulation.

Insulation shall be permanently fastened to the wall and shall extend down from the underside of floor above to grade (covering sill plate and band joists) and the extend downward or horizontally or both for a total of 2 feet at and/or below grade.

CS 1.4 Mechanical/Electric Equipment

In spaces with mechanical equipment add an extra layer of ground cover next to were most of the service activities are likely to occur.

In spaces with combustion equipment, treat the space as a combustion appliance zone (CAZ), providing adequate combustion air and following guidance in **IN 1.12.**

WA—WALL INSULATION

WA 1.0—Introduction

This section applies to exterior walls and buffered walls adjacent to unconditioned areas, such as garages. Insulation shall be installed to reduce heat loss between conditioned and unconditioned spaces or to the outside of the house. Basement walls, conditioned crawlspace walls, and below grade walls do not qualify.

To be eligible for an incentive, the existing wall insulation shall not exceed pre-existing Program limits, and all cavities in all exterior walls shall be insulated to Program minimums or completely filled.

To be considered a complete measure and eligible for incentives, wall insulation shall:

1. Bring all accessible wall areas that are eligible for incentives to the R-Value specified by current Program qualifications (refer to IN 1.0)
2. Bring the accessible wall areas affected by the insulation project into compliance with the applicable requirements listed in Section WA

WA 1.1—Knob and Tube Wiring

Refer to IN 1.2 for Program requirements regarding knob and tube wiring. Enclosed wall cavities with active knob and tube wiring may be left uninsulated as long as this area is equal to or less than 10 percent of the total uninsulated exterior wall area of the conditioned space. This area shall not be eligible for incentives.

WA 1.2—Insulating Closed Walls

This subsection refers to exterior walls and buffered walls adjacent to unconditioned areas, such as garages. Refer to AT 1.13 for Program requirements for buffered walls adjacent to attics. All cavities in all walls shall be filled, including small cavities above, below and to the side of windows and doors. Use of an

infrared camera is strongly encouraged to identify such cavities, and due diligence shall be applied to ensure a consistent level of insulation.

Insulation shall not be installed in wall cavities that serve as air ducts for heating or cooling. Cavities containing wall- mounted heaters shall not be insulated unless there is blocking to prevent contact with insulation. Cavities containing fuse or breaker boxes shall not be insulated without the homeowner's consent. Only non-combustible insulation (per ASTM E-136) shall be installed in wall cavities adjoining fireplaces and/or chimneys.

WA 1.3—Plugs and Finish Work

Plugs shall be sealed, weatherproofed and ready to paint. Plugs shall not be vented. Plugs shall be made of material that will not shrink or expand, which would result in damage to the siding or finish. If the surface of the plug is below the surface of the siding, the hole shall be filled with non-shrinking, waterproof filler. If siding is removed and holes are drilled in the sub-siding, the holes shall be plugged.

WA 1.4—Removing and Replacing Siding

Before replacing siding, holes shall be filled with fitted plugs, covered with tar paper, counter flashed, and stapled. Aluminum siding shall not be cut or drilled. Using siding removal tools, unhook the course above the course to be removed. Remove the nails from the lower course and drill the underlying wall. One-inch holes may be drilled at the shadow line for small cavities over windows. Shingles or shakes shall be nailed every 4" with a minimum 4d galvanized finish nail and at each corner. Clapboard-type siding shall be nailed at every wall stud or 16" on center. All replaced siding shall use galvanized or corrosion-resistant nails and be reinstalled in a professional manner. Any raw wood shall be primed or sealed.

WA 1.5—Open Wall

Open walls that separate conditioned and unconditioned spaces, such as garages adjacent to a conditioned space, shall be sealed for air leakage, insulated to Program minimums (or the cavity shall be filled), and covered with a vapor-permeable air barrier to limit human contact in compliance with the requirements of AT 2.6. See IN 1.8 for the eligibility requirements for homes without intact interior wall coverings.

WA 1.6—Interior Installations

Walls that are inaccessible from the exterior may be filled from the interior, with the homeowner's permission.

WI—WINDOWS AND SLIDING GLASS DOORS

WI 1.0—Introduction

Window requirements shall also apply to sliding glass doors unless otherwise stated. Windows shall be installed and supported according to the manufacturer's specifications and in compliance with prevailing jurisdictional code. If window-weight cavities exist and are accessible, the weights shall be removed and the cavity shall be filled with insulation. Windows shall be sealed to prevent air infiltration. All incentive-qualifying windows shall meet the applicable requirements—unless a waiver is approved in advance by the Program (see IN 1.5)—to be considered a complete measure. Windows shall be installed to prevent

heat loss from a conditioned space to the outside of the house. Basements that are heated, contain heating equipment (including ducts) or have a direct access to the interior conditioned space of a home shall be considered conditioned space for the purpose of window incentive qualification.

Overview for all glazing systems:

Safety glazing shall be used where required by current state code. See subsections about safety glass for details.

Windows shall operate smoothly and safely.

Screens shall be furnished with all operable windows.

Exterior wood, including the frame, sash, trim, stops and sills, shall be at a minimum primed and ready for paint or clad with field formed aluminum trim.

Hardware and fasteners shall be aluminum, stainless steel, galvanized or other corrosion-resistant material.

Any exterior seam/gap connected to the window, trim, or rough opening that could potentially allow the passage of bulk moisture into the building cavity or behind the weather-resistant barrier shall be sealed with an elastomeric sealant that complies with the requirements listed in WI 1.2.

Gaps between the exterior siding and the window that are greater than ⅜" shall be covered with solid trim material. Exterior or interior voids more than ⅜" deep or wide shall be filled with window manufacturer- approved materials, such as backer rod, nonexpanding foam or a similar product prior to caulking, if caulking will be applied.

Weep holes shall be left clear and unobstructed to allow for proper drainage.

Window incentives shall be paid only for replacement windows equal in dimension to or smaller than the original rough opening. Enlarged windows and those installed where no window previously existed are not eligible for Program incentives, except when the window area is increased to meet egress requirements.

Windows shall be installed to meet these specifications unless federal, state or local jurisdictional codes exceed these specifications. In cases where the requirements of this section conflict with the manufacturer's installation guidelines, installers shall defer to the window manufacturer's guidelines and inform the Program of the inability to meet specifications before submitting an incentive application.

Pieces of exterior siding that have been removed and replaced, or otherwise affected by window installation, shall be made weather-resistant upon reinstallation. Any seams opening to the internal weather barrier, sheathing or wall cavity shall be sealed, except for butt joints of fiber cement siding, which may be left unsealed so long as a secondary weather- resistant barrier is present under the siding. Any newly exposed bare wood shall be primed and ready for paint or painted.

Windows shall be installed between conditioned and unconditioned space. Windows installed between unconditioned garages and the exterior of the house are not eligible for Program incentives.

WI 1.1—General Requirements for Glazing

Replacement windows shall be certified and labeled for U-Value in accordance with the simulation, testing and certification procedures of the National Fenestration Rating Council Incorporated (NFRC).

WI 1.2—General Requirements for External Sealants

External elastomeric sealants, such as caulking, shall be installed in accordance with the sealant manufacturer's recommendations. Sealants shall be selected for good adherence to all contacted building materials except backing material and be applied only to clean, dry and oil-free surfaces. Caulking may be applied to joints, seams, gaps or other openings, but shall not be used as a paint to cover exposed wood or other features.

The following window types are common for retrofits. For windows not meeting these descriptions, contact the Program for information about qualifying installations.

WI 1.3—Insert Windows

The Program defines "insert window" as any window that does not have nailing flanges, including windows commonly termed "block windows" and "flush fin windows." If an insert window is installed to replace an existing flanged window, the existing window shall be removed in a way that does not damage the weather-resistant barrier. Insert windows shall be secured to the rough opening within 4" of each side corner and a minimum 12" on center thereafter. Insert windows shall be sized as close to the measurements of the interior jamb as reasonably possible. Gaps more than ⅜" wide between the exterior siding and the insert window shall be trimmed. Exterior or interior voids more than ⅜" deep or wide shall be filled with backer rod prior to caulking. The flashing shall tuck behind the exterior siding at least 1". Insert windows shall be supported at the fin line.

WI 1.4—Surface-Mounted Windows

The Program does not allow surface-mounted windows on site-built houses or on manufactured homes with wood siding. This subsection does not apply to stucco-mounted windows. Surface-mounted windows designed for this purpose may be installed on manufactured homes with aluminum siding, provided that the siding is cut back to allow the window to be integrated with the weather-resistant barrier allowing a drainage path to the outside.

WI 1.5—Flanged Windows

Flanged windows have nailing flanges and are installed on the sheathing or framing. The tops of all flanged windows shall have Z-style rigid flashing, known as a drip cap, inserted behind the weather barrier and over the head trim piece, unless the tops of the windows are protected by an overhang (see Illustration WI 1.6—Exposed to the Elements). Drip caps feature a pronounced lip that slopes gently down toward the exterior. The front edge of a drip cap shall have a downward bending lip of at least ¼" (see Illustration WI 1.5).

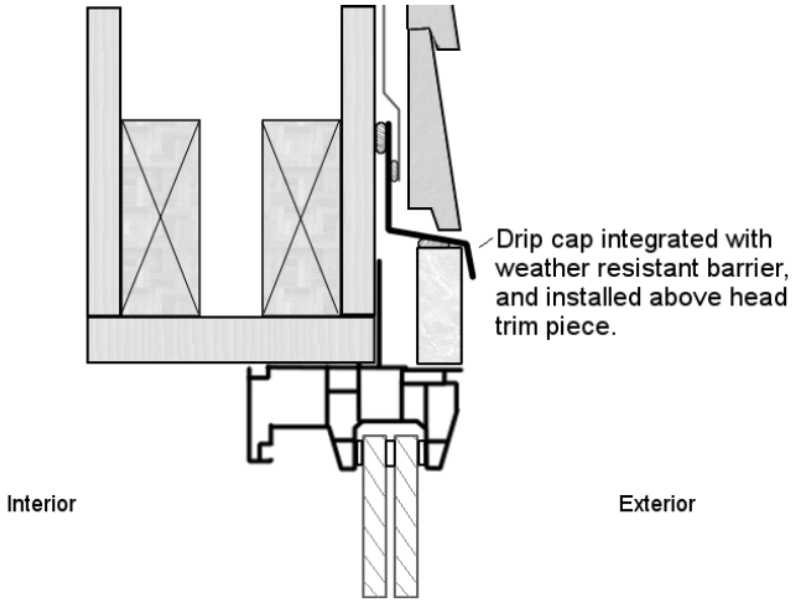

Figure 19: Illustration WI 1.5:

The sides of flanged windows shall be flashed with 15-pound felt or an equivalent manufacturer-recommended flashing material. The flashing material shall be inserted underneath the existing siding and building paper and over the fins of the windows.

The tops of flanged windows shall be flashed with 15-pound felt or an equivalent manufacturer-recommended flashing material. The flashing material shall be inserted underneath the existing siding and building paper and over the top fin of the windows.

The bottoms of flanged windows shall be flashed with 15-pound felt or an equivalent manufacturer-recommended flashing material. The flashing material shall be inserted underneath the existing siding, over existing building paper and under the bottom fins of the windows.

All filler, trim and adjacent siding shall be thoroughly caulked. The flashing shall tuck behind the exterior siding at least 1".

WI 1.6—Exposed to the Elements

To determine if a window is exposed to the elements, use the two-to-one ratio system. See the following illustration:

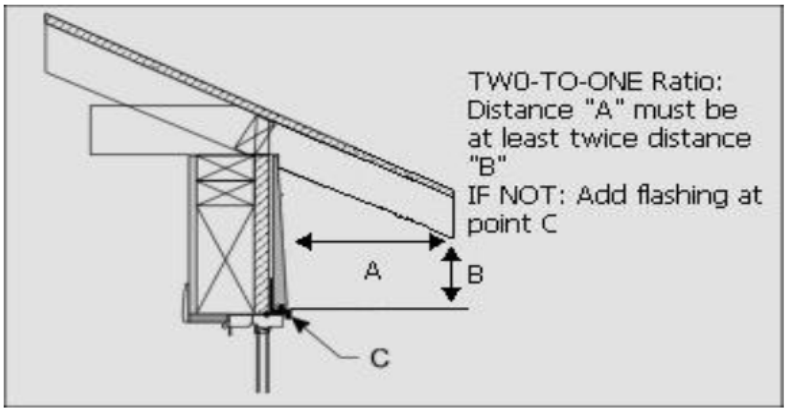

Figure 20: Illustration WI 1.6

WI 1.7—Stucco-Mounted Windows

Stucco-mounted windows are replacement windows that mount directly to the frames of existing windows.

The fin of the new window shall be sealed to the outer flange of the existing window with a sealant designed for this purpose. The lip of the existing aluminum flange shall be at least ⅜" wide. The gap between the frame of the replacement window and the interior trim shall be caulked. If the gap exceeds ¼", the gap shall be filled with window manufacturer- approved materials, such as backer rod, nonexpanding foam or a similar product, prior to caulking, if caulking will be applied. The gap shall then be covered with a permanently attached trim material and caulked on the top and bottom seams.

The bottom rail of the existing window shall be cleaned to prevent blockage of weep holes. The miter joints on the fin of the replacement window shall be smooth so the corners do not bulge from the aluminum window.

WI 1.8—Miscellaneous Requirements

The bottom rail of a sliding glass door shall be firmly supported within ½" of the exterior edge of the frame. Any wood touching the ground or cement shall be pressure treated.

WI 1.9—Health and Safety Requirements

All windows shall meet the following egress and safety-glazing specifications. Installers are required to meet current state or local code if it is more restrictive than the Program specifications.

Any casement, awning or other window that may be opened by the application of force away from or into the structure and that is installed above the first full story shall have a manufacturer-provided window opening control device for child fall protection. The device must prohibit the passage of a rigid sphere 4" in diameter and, when used for egress, must be fitted with a quick release mechanism as mentioned in WI 1.11.

WI 1.10—General Safety Glazing Requirements

Refer to all applicable federal, national, regional, state and local codes or regulations to determine window locations requiring safety glazing.

WI 1.11—Emergency Egress Openings

Refer to all applicable federal, national, regional, state and local codes or regulations to determine requirements regarding egress openings.

2 PART 2: MECHANICAL SYSTEMS

This section covers technical specifications required when installing HVAC and plumbing equipment for program incentives.

To be considered a complete measure and eligible for incentives, mechanical installations shall:

1. Comply with the complete measure guidelines listed in section IN 1.0
2. Comply with requirements regarding code compliance and manufacturer's specifications as outlined in IN 1.1 and 1.12.

CAC—CENTRAL AIR CONDITIONER

CAC 1.0—Introduction

This section governs installation requirements for central air conditioners. Refer to IN 1.2, IN 1.3, and IN 1.14, for additional requirements.

The contractor shall ensure evaporators and condensing units are compatible with one another per AHRI specifications.

CAC 1.1—Thermostat

A programmable thermostat with the ability to program a temperature setback shall be installed.

CAC 1.2—Line Set Requirements

Line set penetrations through the building shell shall be sealed.

Outdoor portions of the line set shall be protected with a mechanically secured rigid covering. In situations where installation of a rigid cover is impractical, a securely fastened UV-resistant covering may be used to protect the line set. The suction line shall be insulated over its entire length with no more than one-inch of line showing at each end, the liquid line may be uninsulated.

CAC 1.3—Outdoor Unit Installation

The outdoor unit shall rest on a permanent pad on a stable, level surface. The unit shall be completely supported with no part of the unit overhanging the edge of the pad.

Clearance around the outdoor unit shall be governed by the manufacturer's requirements.

ECM—ELECTRICALLY COMMUTATED MOTOR (ECM) RETROFIT

ECM 1.0—General Requirements

Only applies when retrofitting a fan motor on an existing furnace or air handler. An ECM included as part of a new furnace or air handler installation does not qualify.

Combined supply and return static pressure shall be between .35-.80 WCI (87-200 Pascal) on the highest heating or cooling fan speed setting upon installation.

All physically accessible ducts should be firmly connected and duct connections at the furnace must be sealed in accordance with section DU.

EVAP—EVAPORATIVE COOLERS

EVAP—EVAPORATIVE COOLERS

Evaporative coolers shall be installed in accordance with the requirements listed in IN 1.0, IN 1.1, IN 1.10, and IN 1.12 and according to the following.

EVAP 1.1—Net Free Area

All evaporative coolers, whether ducted or non-ducted, shall have sufficient net free area, as defined by the manufacturer, for air displaced by the cooler to exit the home. Homeowners shall be educated on the need of pressure relief, e.g., opening a window or being aware of installed pressure relief dampers, to ensure net free area is provided at all times when the cooler is running to prevent build-up of humidity and be able to identify if moisture build up is causing damage to the home or indoor air quality issues. Evaporative coolers shall not be installed in homes with existing moisture issues or substandard ventilation.

EVAP 1.2—Installation

Unit shall be plumb, level, and securely attached to the structure with access for maintenance and servicing. Roof top installations shall be properly flashed and weather tight to prevent leaks.

EVAP 1.3—Maintenance

Homeowners shall be educated on seasonal maintenance, including but not limited to inspecting/replacing cooling pads, cleaning/sanitizing the water reservoir, ensuring pressure relief dampers are not blocked or jammed, and other maintenance recommended by the manufacturer.

GEO—GROUND SOURCE HEAT PUMP

GEO 1.0—General Requirements

Systems should be designed and installed according to the International Ground Source Heat Pump Association (IGSHPA) guidelines (https://igshpa.org/standards), manufacturer recommendations, and all local, state, and federal laws and ordinances.

ENERGY STAR™ rated COP shall be compliant with the most up-to-date version of the ENERGY STAR Specifications for the system being installed.

(http://www.energystar.gov/index.cfm?c=geo_heat.pr_crit_geo_heat_pumps)

Systems should be sized to meet no less than 100% of the design heating load.

All system components, including the ground loop, shall be warranted for a period of no less than 5 years.

System should be certified as a "PTCS (Ujwktwr fshj%Yjxyji%Htr ktwy%X~xyjr x.%Commissioned Heat Pump" and be documented using the PTCS Ground Source Heat Pump Form.

https://www.bpa.gov/EE/Sectors/Residential/Documents/PTCS_GSHP_Form.pdf.

PTCS specifications can be found here: https://ptcs.bpa.gov/ .

HP BP—HEAT PUMP WITH BEST PRACTICES AND INSTALLATION

HP BP 1.0—Introduction

These are requirements of the installation of cold climate air source heat pumps as defined by the Northeast Energy Efficiency Partnerships NEEP (https://neep.org/).

This section governs installation requirements for ducted and ductless heat pump systems. Refer to IN 1.1, IN 1.10, IN 1.12, and IN 1.13 for additional requirements.

The contractor shall ensure evaporators and condensing units are compatible with one another per AHRI specifications.

HP BP 1.1—Thermostat

A programmable thermostat with the ability to program a temperature setback shall be installed. The temperature setback shall be no more than 3 degrees Fahrenheit to maximize energy-efficient operation. The balance point shall be within 5 degrees (plus or minus) of 30°F.

Heat pump systems in very tight/well-insulated homes (e.g., passive house) may not benefit from a programable thermostat because of the extra energy it takes to heat up the building when it goes into occupied mode.

HP BP1.2—Line Set Requirements

Line set penetrations through the building shell shall be sealed. Outdoor portions of the line set shall be protected with a mechanically secured rigid covering. In situations where installation of a rigid cover is impractical, a securely fastened UV-resistant covering may be used to protect the line set. . The suction line set shall be insulated over its entire length with no more than one inch of line showing at each end. The liquid line shall be insulated as above unless the TXV is located at the indoor unit.

HP BP1.3—Outdoor Unit Installation

The outdoor unit shall rest on a permanent pad on a stable, level surface. The outdoor unit shall not be covered with debris or have obstacles nearby that restrict or prevent airflow over the unit. The unit shall be completely supported with no part of the unit overhanging the edge of the pad.

In cold climates, elevate the unit to maximize clearance under the outdoor unit for easy drainage and ice buildup and above snow depth level.

Ensure that the outdoor unit is away from or protected from increased sources of water/ice/snow from above (e.g. beneath drip edge, beneath another heat pump, etc.)

New tubing flares shall be created and connected with the R410A nuts (supplied with your indoor and outdoor unit). Flare nuts provided by the tubing manufacturer shall not be used.

HP BP 1.4—Air Flow Test

Air flow shall be tested after installation preferably using a TrueFlow Air Handler Flow Meter™ . The Energy Conservatory™ Flow Conversion and Flow Resistance Correction Factors are available in Appendix E and F. An alternative test method involves checking return air static, supply air static, and total static pressures and comparing to the Static Pressure Air Flow Chart. Refer to Appendix G. Other methodologies may be used with Program pre-approval. Air flow across the coil shall be 350 CFM/ton or greater, tested at the highest heating or cooling capacity.

HP BP 1.5—Refrigerant Charge Performance Check

Refrigerant charge can be checked by either measuring subcooling OR by a temperature split check depending on outdoor temperature:

Subcooling Test:

- Test with unit in cooling mode when outdoor temperature is 65° F or higher.
- Run unit for at least 15 minutes before taking reading.
- Confirm measured sub-cooling is within +/- 3˚F of manufacturer's target value.
- Alternatively, confirm approach temperature matches manufacturer's target value.

Temperature split:

- Test with unit in heating mode when outdoor temperature is below 65° F
- Confirm measured temperature split is equal to or exceeds expected values in Heat Pump Temperature Split Chart. Refer to Appendix H.

HP BP 1.6—Lockout Controls

Heat pump installations shall use control strategies that minimize unnecessary use of auxiliary heat. In all systems, auxiliary heat shall not operate during a first stage heating call (unless system is switched to emergency heat.) Controls shall be in place so that auxiliary heat will not be engaged if the outdoor temperature is above 35°F, unless supplemental heating is required for defrost cycle or for emergency heating.

HP BP 1.7—Sizing

Manual J or an equivalent load calculation shall be performed to determine loads of home. A block, or whole house, load calculation is acceptable as opposed to a room-by-room load calculation.

Capacity of the heat pump must be sized within one-half ton (6,000 BTU/hr.) of the calculated heating load or the next available size.

Heat pumps shall be sized using a 30° F balance point.

Auxiliary heat capacity shall not exceed 125 percent of the heating design load.

2.1 WH—HEAT PUMP WATER HEATERS

WH 1.0—Introduction

This section governs installation requirements for heat pump water heaters. Refer to IN 1.2, IN 1.3, IN 1.14, IN 1.15 and IN 1.16 for additional requirements. See Appendix D for additional best practices regarding heat pump water heaters.

WH 1.1—Installation

The heat pump condensate shall be removed from the area of installation via an adequately sloped drainage system, condensate pump or connection to an existing plumbing drain. Condensate drains may terminate at a sump well, or French drain. If drained to the outdoors, avoid creation of a slip hazard over sidewalks and driveways.

Ensure the unit location meets manufacturer space requirements and that the unit has adequate manufacturer recommended clearances around and above the unit.

Ducting and applicable fans settings shall be set in accordance with the manufacturer's specifications. Refer to IN 1.12.

Ducting is not required, but if only exhaust air is ducted outside of conditioned space (intake air is not ducted), contractor should ensure combustion appliances are functioning properly and safely. Refer to IN 1.10.

3 PART 3: NEW HOMES PERFORMANCE PATH WHPP—

WHOLE HOME PERFORMACE PATH: OVERVIEW

WHPP 1.0— Introduction

This measure adheres to specifications of the regional New Homes Performance Path developed by the Northwest Energy Efficiency Alliance (NEEA), the Regional Technical Forum (RTF), and Bonneville Power Administration (BPA). Specific modeling requirements and program guidelines have been developed and are available on the BetterBuiltNW website resources page. Entering the home into the Axis database is currently not required.

Applicable documents on the BetterBuiltNW website resources page include:

Performance Path Overview – Brief introduction to the measure with links to additional information.

Rater Performance Path Overview Webinar- Live recording delivered by BetterBuiltNW staff covering how the measure works, NW Modeling Requirements, and use of the AXIS data base.

Rater Performance Path Overview and Modeling Presentation – PDF of the modeling slides from the Rater Performance Path Overview Webinar.

Northwest Modeling Requirements – Detailed guidance on modeling homes in REM/Rate to align with program requirements.

Performance Path User-Defined Reference Homes (UDRH) – These files are used within REM/Rate to estimate percent savings above code to qualify homes for the program.

For additional information regarding this measure, please email:

HESTradeAllyRMP@rockymountainpower.net

or call the Home Energy Savings Trade Ally Hotline, 1.800.942.0281, option 1.

4 APPENDIX A: WEIGHTED ATTIC R-VALUE TABLES

These tables shall be used to determine the weighted R-Value of a single attic space with varying levels of insulation. These figures are determined by using a weighted average R-Value calculation without including framing assembly U- Values:

U-Value (U) = 1 ÷ R-Value

Area (A) = area in sq. ft.

Weighted R-Value = $1 \div [(U_1A_1 + U_2A_2) \div (A_1 + A_2)]$

In cases where the existing insulation level is R-0, an R-Value of R-1 is used in its place to determine weighted R-Value.

50% larger, 50% smaller	Larger Area R-Value								
Smaller Area R-Value	0	4	7	11	14	19	24	30	38
0	1	2	2	2	2	2	2	2	2
4	2	4	5	6	6	7	7	7	7
7	2	5	7	9	9	10	11	11	12
11	2	6	9	11	12	14	15	16	17
14	2	6	9	12	14	16	18	19	20
19	2	7	10	14	16	19	21	23	25
24	2	7	11	15	18	21	24	27	29
30	2	7	11	16	19	23	27	30	34
38	2		12	17	20	25	29	34	38

60% larger, 40% smaller	Larger Area R-Value								
Smaller Area R-Value	0	4	7	11	14	19	24	30	38
0	1	2	2	2	2	2	2	2	2
4	1	4	5	6	7	8	8	8	9
7	2	5	7	9	10	11	12	13	14
11	2	5	8	11	13	15	16	18	19
14	2	6	9	12	14	17	19	21	23
19	2	6	9	13	16	19	22	24	27
24	2	6	10	14	17	21	24	27	31
30	2	6	10	15	18	22	26	30	34
38	2	6	10	15	19	24	28	33	38

70% larger, 30% smaller	Larger Area R-Value								
Smaller Area R-Value	0	4	7	11	14	19	24	30	38
0	1	2	3	3	3	3	3	3	3
4	1	4	6	7	8	9	10	10	11
7	1	5	7	9	11	13	14	15	16
11	1	5	8	11	13	16	18	20	22
14	1	5	8	12	14	17	20	22	25
19	1	5	9	13	15	19	22	26	29
24	1	5	9	13	16	20	24	28	32
30	1	5	9	14	17	21	26	30	35
38	1	5	9	14	17	22	27	32	38

80% larger, 20% smaller	Larger Area R-Value								
Smaller Area R-Value	0	4	7	11	14	19	24	30	38
0	1	3	3	4	4	4	4	4	5
4	1	4	6	8	9	11	12	13	14
7	1	4	7	10	12	14	16	18	20
11	1	5	8	11	13	17	19	22	25
14	1	5	8	11	14	18	21	24	28
19	1	5	8	12	15	19	23	27	32
24	1	5	8	12	15	20	24	29	34
30	1	5	8	13	16	21	25	30	36
38	1	5	8	13	16	21	26	31	38

5 APPENDIX B: QUICK REFERENCE GUIDE

(R-Values in Tables 1–4 are typical and intended as guides when specific manufacturer information is unavailable.)

Table 1

Insulation Material	R-Value (per inch)	Description (typical)
Fiberglass loose fill*	2.5	Colors: pink/white/yellow
Fiberglass batts (blanket)*	3.2	pink/white/yellow
Cellulose fiber*	3.5	Light gray/recycled paper products
Rockwool loose fill*	2.8	Black/gray, similar to fiberglass
Vermiculite or Perlite*	2.7	Silver/brown, mica-like
New cellulose fiber**	3.5	pink/white/yellow
New fiberglass loose fill**	2.9	pink/white/yellow

* Indicates derating due to effects of aging and settling.

Table 2

Existing Fiberglass Loose Fill	R-Values
3.5"	9
5"	12.5
6"	15
7"	17.5
8"	20
9"	22.5
10"	25
12"	30
15"–17"	38

Table 3

Existing Rockwool Loose Fill	R-Values
3.5"	10
5"	14
6"	17
7"	20
8"	22.5
9"	25
10"	28
12"	34
15"	42

Table 4

Existing Cellulose Loose Fill	R-Values
4"	12
5"	17.5
6"	21
7"	24.5
8"	28
9"	31.5
10"	35
11"	38.5
12"	42

APPENDIX C: GLOSSARY

ACCA—Air Conditioning Contractors of America

AFUE—Annual fuel utilization efficiency. Used for gas furnaces and boilers, this rating factors in fuel combustion inefficiencies, exhaust flue heat loss, and heat loss from the appliance itself.

AGA—American Gas Association

AHRI—Air-Conditioning, Heating and Refrigeration Institute

Air barrier—A continuous barrier to air movement that separates interior (conditioned) space from exterior (unconditioned) space. An air barrier is created by sealing all penetrations to unconditioned space with durable materials.

Air Changes per Hour (ACH)—The rate at which the full volume of air of a conditioned space is replaced with unconditioned air over the course of one hour, due to natural conditions. ACH_{50} is the number of times this replacement occurs at a constant pressure of 50 pascals.

Air sealing targets areas—Locations of high importance for effective air sealing, including attic and basement hatches; plumbing and electrical penetrations; large gaps in walls or exterior surfaces; and framing around windows and doors.

ANSI—American National Standards Institute

ASTM—American Society for Testing and Materials

ASTM E-136—A rating for noncombustible materials. Examples include sheet metal and rated caulks. These materials are appropriate for air sealing around a chimney or flue. Products meeting this rating will have the

ASTM E-136 rating on the label. No foam meets this rating.

ASTM E-84—A flame spread rating for building materials. Examples include materials made out of mineral, wool, foil- faced fiberglass board and fire-treated corrugated cardboard. Products meeting this rating will have the ASTM E-84 rating on the label.

ASTM E-814—A rating for an assembly of materials that inhibits the spread of fire and hot gases through a home. Examples include gypsum board and ASTM E-814-rated foam and caulk. These materials are appropriate for air sealing and may be required by code in some locations.

Auxiliary heat—Applies only to heat pump systems. Electric resistance coils activated when the outdoor temperature is below the heat pump's balance point. Also known as strip heat, second-stage heat, supplemental heat, emergency heat, and backup heat.

Baffles—Rigid material used to contain loose-fill insulation.

Balance point— The point at which a ducted heat pump no longer has capacity to meet 100% of the home's load resulting in the need for auxiliary heat.

Building cavity duct—Any enclosed cavity used for a forced-air duct system. This includes joists where sheet metal forms a pan across the joists.

CAC – Central Air Conditioner

Combustion appliance—Any fuel-burning appliance, including ovens, dryers, water heaters and heating systems, that utilize natural gas, propane, oil, kerosene or wood.

Combustion Appliance Zone (CAZ)—A conditioned space or enclosed area containing a combustion appliance for the purpose of space heating or water heating. Refer to IN 1.12 for general Program requirements, to MA 3.0 for testing procedures for Existing Manufactured Homes projects, and to Appendix D for additional guidelines.

Complete measure—An installation of an Energy Trust incentive-qualifying measure that meets all requirements in the Specifications Manual and the minimum requirements at all reasonably accessible locations. For example, attic insulation shall be R-38 over the entire surface adjacent to conditioned space and ducts shall be sealed at every joint and seam.

Condensate drain—Any drainage system that allows condensation created by condensing gas heating appliances and heat pump equipment to flow into a dedicated drain or outside a building enclosure.

Conditioned basement—Any basement that contains HVAC ducts and/or is accessible from another conditioned space. Other basements may be considered conditioned if they are largely connected to the conditioned space of the house and separated from the outside.

Conditioned space—An enclosed area within a building that is heated and designed, or modified, to have a complete and effective pressure boundary. Garages, barns, unattached shops, sheds, unfinished attics and crawlspaces are considered unconditioned space for the purposes of incentive qualification. Garages are defined as any space, whether heated or not, that feature a large door designed to permit the entry of an automobile. Contact the Existing Homes Program for more information.

Connected area—For purposes of incentives eligibility, an area is considered connected to another area if there is not a complete physical separation between the two. For example, in a half story that has rake attics, a crown attic, and vented sloped cavities between the two, the rake and crown attics are considered connected by the vented sloped cavities.

Crown attic—Uppermost attic flat, adjacent to a sloped cavity; commonly seen in one-and-a-half-story homes.

Cubic feet per minute (CFM)—Rate of flow for air movement between defined areas. CFM_{50} is the rate of air flow at a constant pressure of 50 pascals.

Direct vented appliance—A combustion appliance that pulls outside air for combustion and vents combustion gases directly outside.

ECM – Electronically Commutated Motor

EER – Energy Efficiency Ratio.

Electric Cooling – Permanently installed, electric heat pump or ducted electric central air conditioner serving as the home's current primary cooling source. Room air conditioners and evaporative cooler do not qualify.

Electric heating – Permanently installed, ducted system consisting of an electric furnace, heat pump with electric resistance backup, or electric zonal heating system (baseboard or ceiling/wall heaters) serving as the home's current primary heat source (space heaters do not qualify). Heat pumps with gas backup are not considered electric heating for the purposes of the Program.

Encapsulated batts—Fiberglass batts with a perforated vinyl cover. Can serve as a vapor-permeable air barrier in human contact/storage areas and are acceptable for installations.

Enclosed cavity—Space bordered on all sides by rigid material.

Exhaust device—A mechanical unit intended to remove indoor air pollutants, including bathroom exhaust fans, dryers and mechanical ventilation devices.

Exterior attic access—Entry into unconditioned attic space directly connected to other unconditioned areas, including garages and outside.

Faced batt-type insulation—Faced batts have an air and/or vapor barrier on one side, usually made of kraft paper.

Flex duct—Flexible plastic sheeting over a metal wire coil.

Ground cover—Six-mil or thicker black polyethylene used to prevent water vapor from emanating from soil in unfinished crawlspaces or basements.

HES – Home Energy Savings

HSPF—heating seasonal performance factor. Records the number of BTUs of heat delivered for each watt-hour of electricity used. Factors in both the high-efficiency compressor and the less-efficient electric resistance backups.

Human contact area—Location where occupants go for routine maintenance or storage.

HVAC—heating, ventilation and air conditioning. Refers to components of a home's mechanical systems that provide space heating and cooling.

IC-rated light fixtures—Insulation Contact-rated fixtures do not need to be baffled to prevent insulation from contact. Insulation may be piled directly on top of fixture. An ICAT fixture is a type of IC-rated light fixture that is manufactured as an airtight unit.

Ignition barrier—A material rated to inhibit the development of flame across its surface, often placed between a known combustible material and a potential heat source.

Interior attic access—Entry into unconditioned attic space directly connected to a conditioned area.

Knee wall—A short wall between an attic floor and a sloping roof that separates a conditioned and unconditioned space.

Minimum ventilation level (MVL)—Level of a structure's natural ventilation, below which mechanical ventilation is required.

Non-electric heating— Heating system with gas, oil, wood, pellet stoves, and propane serving as the home's current primary heat source.

Net Free Area (NFA)—The net area of properly baffled passive ventilation; the total area of the vent minus the area blocked by screens or louvers.

Open wall(s)—Any vertical barrier between conditioned and unconditioned space where the framing is visible from any side.

Pa – Pascal Passive ventilation—Natural ventilation of a space caused by wind or temperature-driven convection. Does not include moving parts such as fans.

Performance-based duct sealing—Sealing ductwork in compliance with PTCS guidelines, which includes the use of a pressure test to evaluate the duct system's air leakage to outside, both before and after work is performed.

Post and beam—Floor construction using a support system of beams typically spaced 30"–48" on center. See UN 2.2 for spacing/spans.

Prescriptive duct sealing—Sealing ductwork in compliance with Program guidelines, without the use of pressure diagnostic tests to identify and quantify air leakage to outside.

Primary heating system—The main heating equipment that is permanently installed and designed to provide most of the heat inside a home, regardless of use or condition. Existing Homes cash incentives are available for homes with an electric or natural gas primary heating system with fuel provided by Portland General Electric, Pacific Power, NW Natural Gas or Cascade Natural Gas.

QPL – Qualified Products List.

R-Value—Measurement of a material's thermal resistance, commonly used to describe insulation materials. An increase in R-Value results in an increase in thermal resistance. R-Value is the inverse of U-Value (R = 1/U).

Rake—Horizontal section of side attic.

Register—A ventilation grill separating HVAC ducting from conditioned space.

Return—Duct that brings conditioned air from the house to the air handler.

Rim or band joist—Area of a home where the concrete foundation meets the floor joists.

RMP – Rocky Mountain Power

SEER—seasonal energy efficiency ratio. SEER compares the number of BTUs of heat removed per watt-hour of electricity used on a seasonal basis.

Side attics—Unfinished areas located on the same floor as, and adjacent to, finished spaces. May be considered conditioned or unconditioned, depending on certain criteria.

Skylight—Any window unit in an opening in the roof assembly, including one that is installed at a slope of 15 degrees from vertical or greater.

Sloped ceilings—Angled ceilings, including vaults, over conditioned spaces that may follow the roof line or intrude into the attic space above and may require special consideration when installing insulation.

Spray-foam insulation—A foam-plastic material applied with a foaming agent for use as insulation.

Steady state—Heating equipment, such as a gas furnace, enters a steady state when all heating-related components reach the temperature at which they will remain until the end of the heating cycle.

Supply—Delivers conditioned air from the air handler into the home.

Thermal barrier— A material rated to resist heat and flame transmission across its surface, significantly slowing flame spread and limiting the potential fuel source available to an open flame.

Thermal boundary—Any surface or building material that serves to resist the transmission of heat energy between conditioned and unconditioned space.

Thermal envelope— The collection of all surfaces and building materials in a structure that resist air loss and heat transmission between conditioned and unconditioned space. Often referred to as the "building envelope."

TXV – Thermal Expansion Valve

U-Value—Measurement of a material's thermal transmission, commonly used to describe windows, doors and skylights. A decrease in U-Value results in a decrease in thermal transmission. U-Value is the inverse of R-Value (U = 1/R).

Unconditioned space—Space within a building that is not heated or cooled by an active system or directly linked to conditioned space; outside.

Unfaced batt-type insulation—Batt-type insulation with no vapor or air barrier attached.

Upper attics—Unfinished areas located above finished spaces. Upper attics are usually considered unconditioned space, except in rare cases.

Vapor barrier—A material restricting the movement of water vapor from an area of high vapor pressure to one of lower pressure. Material with a perm rating of 1.0 or less is normally considered a vapor barrier.

Vapor-permeable air barrier—Any material, including house wrap, that substantively blocks air from passing, but allows water vapor to pass through via pores that are narrower than air. WCI – Water Column Inches

Weatherization measure—Installation of insulation, air sealing, duct sealing and/or windows.

Weather-resistant barrier—The outermost surface in the building envelope that is specifically designed to prevent water/moisture from entering a building or building cavity. Aluminum or vinyl siding is not considered a weather- resistant barrier.

Wintertime conditions— A scenario where all overhead garage doors, exterior doors, windows, flues and dampers are closed, all interior doors and duct registers are open, and all ventilation fans are shut off. Used to perform performance- based air leakage and duct leakage tests.

6 APPENDIX D: BEST PRACTICE GUIDELINES

This appendix lists best practice guidelines for installing high-quality, long-term energy-efficiency measures, equipment, and services. **Guidelines contained in this appendix are not Program requirements**. They are intended to provide beneficial advice when performing energy efficiency upgrades.

Best Practice: Air Sealing.

The Program recommends including a mechanical ventilation strategy as part of the scope of work if air sealing may result in occupant health and safety concerns and/or building durability concerns.

Air sealing is not recommended if a visual inspection determines the home has obvious indoor air quality concerns.

Best Practice: Attic Insulation.

The Program recommends all ducts in attic spaces to be sealed according to section DU so the energy-saving opportunity is not lost after insulation is installed.

Existing pest or moisture problems should be addressed to ensure measure and building durability.

An attic insulation certificate should be displayed in plain view of the access hatch that details square footage of insulation installed, bag count, initial R-value, finished R-value, brand, and date installed.

To prevent water vapor transmission and support the effective R-Value of the attic insulation, the Program recommends sealing all accessible attic penetrations between conditioned and unconditioned space. Attic air sealing opportunities include plumbing, wiring and duct penetrations, top plates, mechanical chases, soffits and similar openings in the air barrier of the attic. When air sealing, appropriate backing materials should be used to bridge openings that cannot be effectively closed by a sealant. Caulk, foam or other compatible sealants should be used. See the Section AT in this manual for additional guidelines.

Best Practice: Wall Insulation

The Program strongly recommends that weather-resistant barriers (WRB) are repaired/replaced when affected by the installation of wall insulation. Plugs that are located at the sub-siding should be covered with a properly installed WRB after the plugs are sealed. When possible, needed runs of siding should be removed and insulation installed through holes drilled through the sheathing

Best Practice: Carbon Monoxide

The Program strongly recommends that a carbon monoxide alarm be installed whenever a weatherization measure is performed.

Carbon monoxide alarms should be installed in each bedroom of a house or at minimum within 15 feet of each sleeping area. Contractors should educate their customers on the use of carbon monoxide alarms and precautions that should be taken if the alarm activates. The intention of the alarm is to warn occupants before they experience the symptoms of carbon monoxide poisoning. CO alarms are not needed in all electric homes with detached garages and with no wood burning appliances.

Best Practice: Manufactured Homes

All HVAC ductwork, including plenums, shall be repaired, sealed and properly supported, according to section DU before underfloor insulation is installed. Non-ducted return-air systems in the floor cavity shall be eliminated.

Best Practice: Spray-Foam Insulation

Customers should be notified if spray-foam insulation will limit access to electrical services, natural gas lines, HVAC system components or plumbing.

Best Practice: Heating Systems.

Existing Homes recommends that heating and cooling systems be sized in accordance with Manual S, Manual D, Manual J, Spec Pro or another industry-accepted HVAC calculation methodology based on building heating loads. The equipment manufacturer's selection procedures and sizing guidelines should be referenced as part of the HVAC planning and sizing process.

Best Practice: Ductless Heat Pumps.

Size the unit appropriately to the space to be conditioned; oversized systems negatively impact unit performance.

For optimal performance of the unit, the program recommends using risers between the unit and the permanent pad. Adjustable risers will help prevent debris and snow buildup and allow for better drainage. Riser blocks specifically manufactured/intended for this purpose should be used. The riser blocks should be mechanically or chemically secured to the pad. A pan heater can prevent defrost discharge from freezing inside the compressor and is recommended in extreme climates.

Educate homeowner on filter cleaning and other manufacturer recommended maintenance.

For more information on installation best practices for DHPs, see NW Ductless Heat Pump project's Best Practice Guide: https://goingductless.com/assets/documents/uploads/DHP_BP-Guide_FNL.pdf.

For additional information on supplementing electric forced air furnaces with ductless heat pumps, see http://www.bpa.gov/energy/n/emerging_technology/pdf/DHP_FAF_Dec_12.pdf .

Best Practice: Heat Pumps

The Program recommends that the maximum line set length be less than or equal to the manufacturer's specifications, and the line set diameter shall match the manufacturer's recommendations. Both Suction and liquid lines shall be insulated over their entire length with no more than one-inch of line showing at each end.

The Program recommends that outdoor units be checked for adequate airflow using a TrueFlow Air Handler Flow Meter™.

Strip heat should be set up to not come on in the first stage of operation. Refrigerant charge should be installed in accordance with the manufacturer's specifications. Airflow should be a minimum of 350 CFM per ton.

Best Practice: Heat Pump Water Heaters.

If ducting is installed, apply duct insulation and a vapor barrier, or use suitable plastic ducting, to prevent condensation formation on ductwork. If exhaust air only is ducted outside of conditioned space, contractor should ensure combustion appliances are functioning properly and safely and a carbon monoxide alarm should be installed in the home if combustion appliances are present.

Installed ducting should be done to manufacturer's specifications, with manufacturer-approved parts.

Avoid installations near bedrooms or living rooms; if unavoidable, consider using noise dampening features in the space or isolate vibration if noise is a concern. Also consider homeowner comfort impacts of cold air exhaust.

Refer to manufacturer's specifications for efficient mode operation.

Demonstrate filter access and maintenance to homeowner.

Any plumbing lines in unconditioned space should be insulated to prevent energy loss and frozen pipes.